Electric Fire Pump Controller With Automatic Transfer Switch

Dimensions

Model: GPA/GPP/GPY +GPU

Built to the latest edition of the NFPA 20 standard

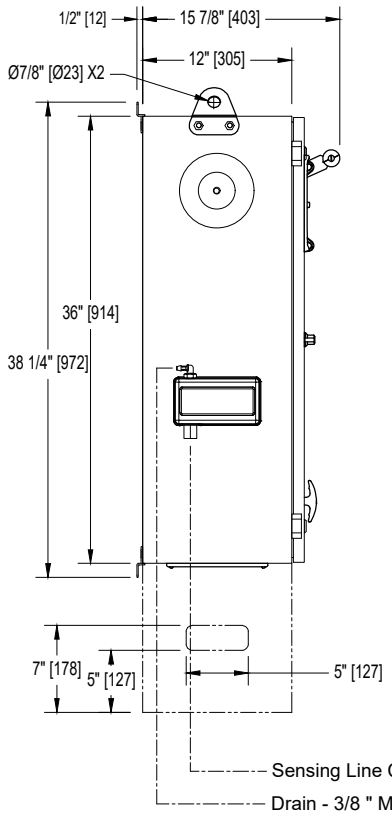

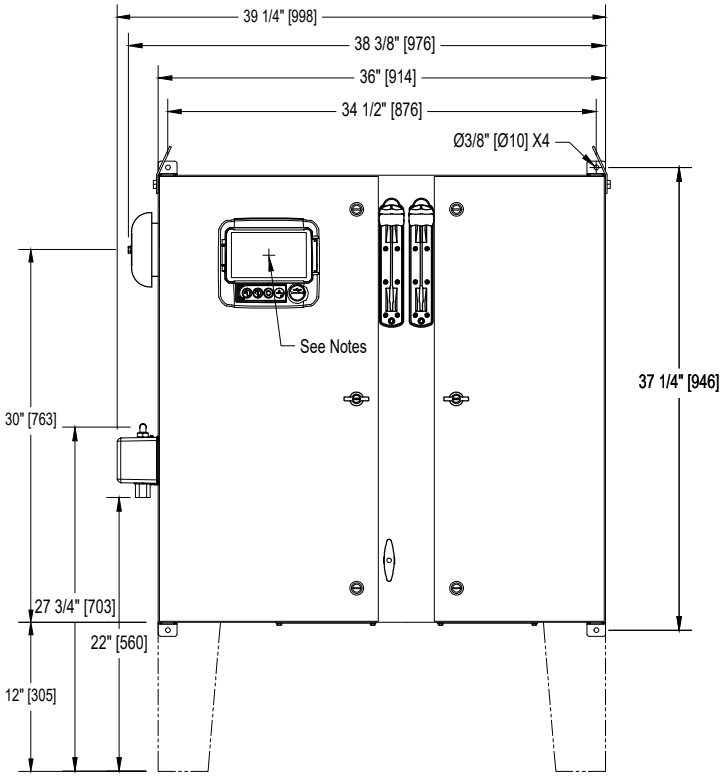

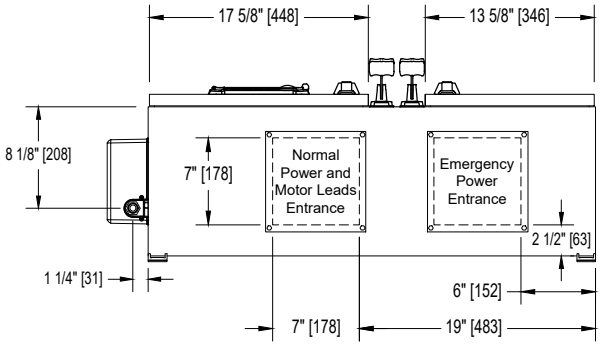

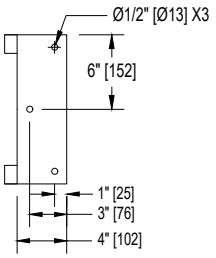

Voltage / Power Table		
Voltage	Min HP	Max HP
208	5	30
220 - 240	5	30
380 - 400 - 415	5	60
440 - 480	5	60
600	5	75

Notes:

- Standard NEMA: NEMA 2
- Standard paint : textured red RAL 3002.
- All dimensions are in inches [millimeters].
- Center of ViZiTouch screen: 29-5/8" [751] from bottom (no feet).
- Bottom conduit entrance through removable gland plate recommended.
- Use watertight conduit and connector only.
- Protect equipment against drilling chips.
- Door swing equal to door width.

Drawing for information only.
Manufacturer reserves the right to modify this drawing without notice.
Contact manufacturer for "As Built" drawing.

Projection

TORNATECH

NYC Dpt of Building Approved

REV.	DESCRIPTION	DD/MM/YY
3.	Removed Seismic logo (optional)	18/05/22
2.	New Logo	10/05/18
1.	Valve Change	21/11/17

Drawing number: GPX-DI162 /E

Copyright © 2022 Tornatech Inc. All right reserved. This drawing and the information contained or depicted herein are the sole property of Tornatech Inc. Copies are communicated to the recipient in strict confidence and may not be retransmitted, published, reproduced, copied or used in any manner, including as the basis for the manufacture or sale of any products, without the express prior written consent of Tornatech Inc.