TORNATECH

© Tornatech, Inc. Not for construction. Subject to change without notice.

	BY	DD/MM/YY
DRAWN BY	MLC	04/10/24
FINAL APPROVAL	FC	07/11/24

ELECTRIC FIRE PUMP CONTROLLER

MODEL: GPA/GPP/GPY

BUILT TO THE LATEST EDITION OF THE NFPA20 & NFPA70

NYC Dpt of Building Approved

THIRD ANGLE PROJECTION

DRAWING NUMBER GPX-DI910/E

DWG REV. 0

SHEET 1 OF 1

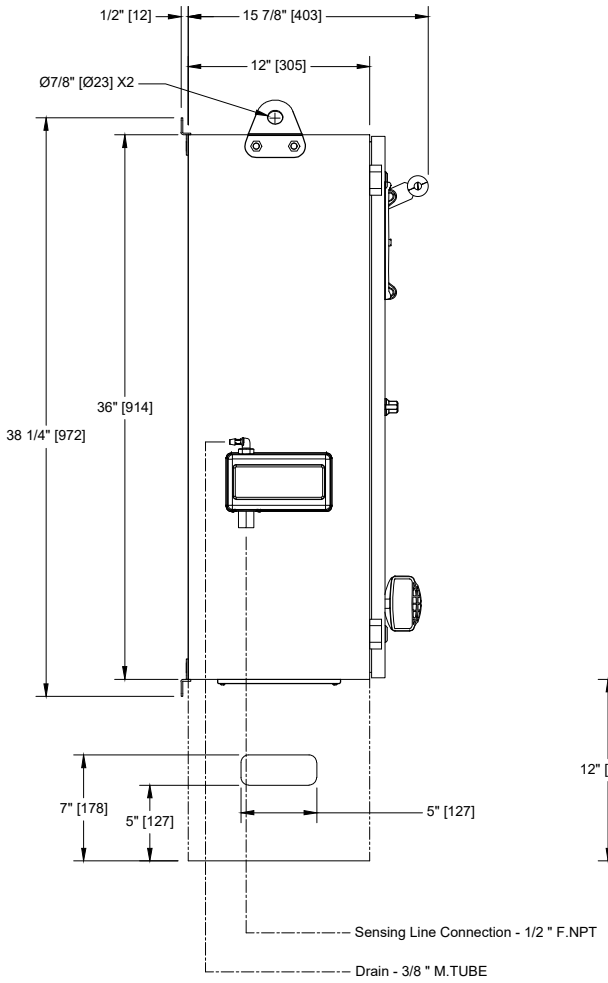

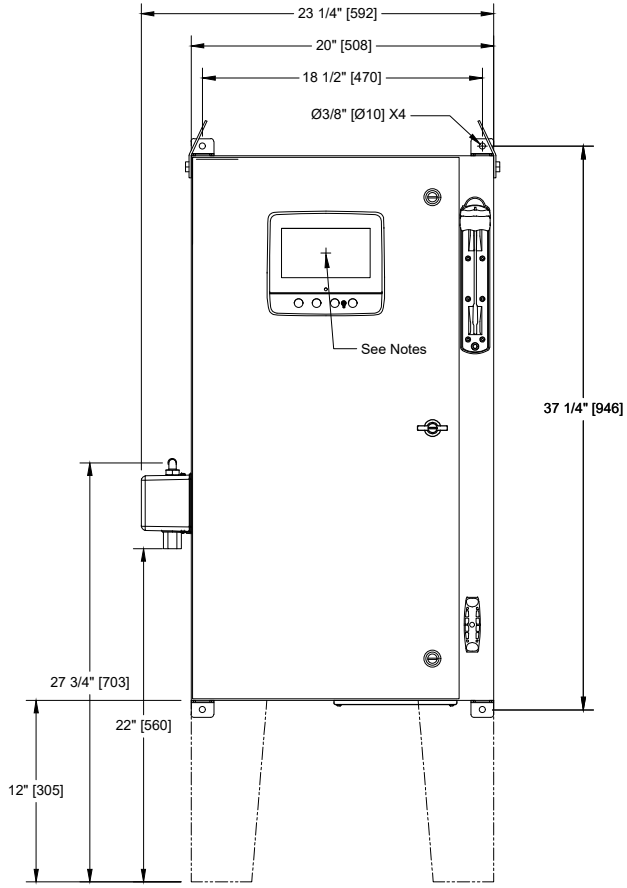

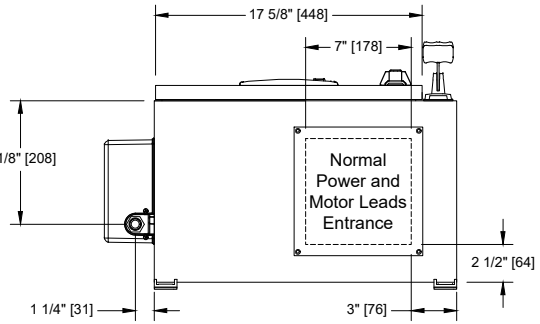

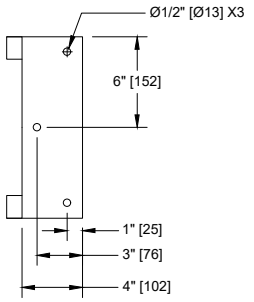

Voltage / Power Table		
Voltage	Min HP	Max HP
208	5	30
220 - 240	5	30
380 - 400 - 415	5	60
440 - 480	5	60
600	5	75

Notes:

- Standard: NEMA 2
- Standard paint : textured red RAL 3002.
- All dimensions are in inches [millimeters].
- Center of screen: 29-5/8" [751] from bottom (no feet).
- Bottom conduit entrance through removable gland plate recommended.
- Use watertight conduit and connector only.
- Protect equipment against drilling chips.
- Door swing equal to door width.

Copyright © 2026 Tornatech Inc. All right reserved. This drawing and the information contained or depicted herein are the sole property of Tornatech Inc. Copies are communicated to the recipient in strict confidence and may not be retransmitted, published, reproduced, copied or used in any manner, including as the basis for the manufacture or sale of any products, without the express prior written consent of Tornatech Inc.