TORNATECH

**Project:** _____

**Customer:** _____

**Engineer:** _____

**Pump Manufacturer:** _____

## Technical Data
## Submittal Document

# GPx Series

Full Service
Electric Fire Pump Controller

**Contents:**

Data Sheets
Dimensional Data
Wiring Schematics
Field Connections

**Note: The drawings included in this package are for controllers covered under our standard offering. Actual AS BUILT drawings may differ from what is shown in this package.**

c UL us FM APPROVED N.Y.C. APPROVED CE

November 2025

## Select starting method

### ☐ Model GPA
**Across the line**

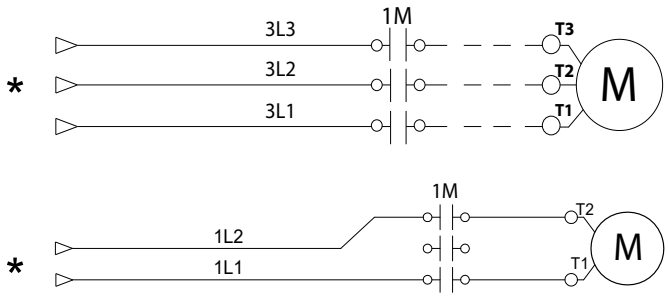


### ☐ Model GPP
**Partwinding**

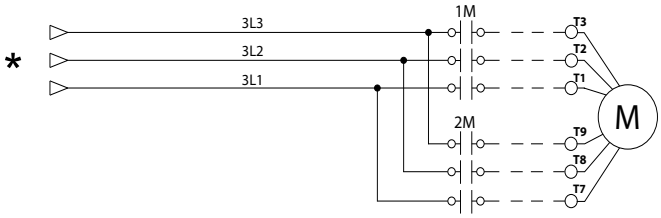


### ☐ Model GPS
**Soft Start Soft Stop**

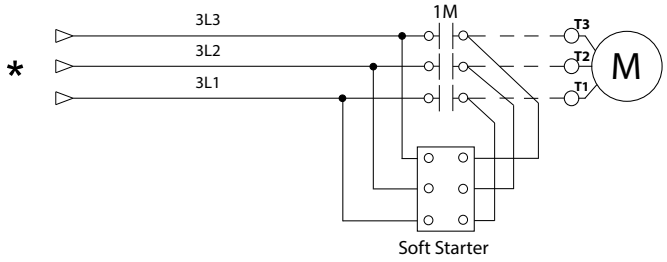


### ☐ Model GPR
**Autotransformer**

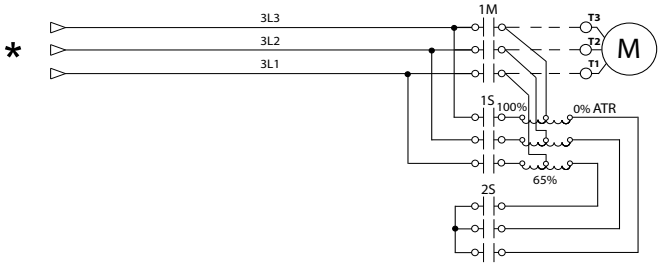


### ☐ Model GPY
**Wye-Delta Open**

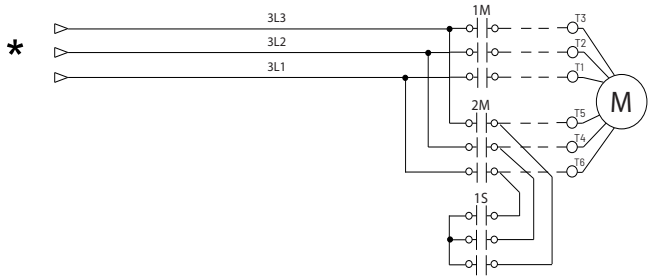


### ☐ Model GPW
**Wye-Delta Closed**

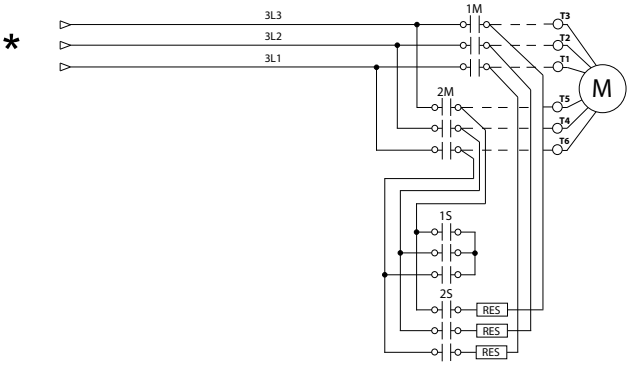


*From normal incoming power through Disconnecting Means (IS/CB)
*Please see Disconnecting Means details on page 4


This is a Marketing document. Please consult factory for more information.
Manufacturer reserves the right to modify this information without notice

## Select voltage and power rating

| Voltage | Select Voltage | HP | Select HP |
|---|---|---|---|
| 120V/1ph/60Hz [1] | ☐ | 5 | ☐ |
| 200V/1ph/60Hz [1] | ☐ | 7.5 | ☐ |
| 208V/1ph/60Hz [1] | ☐ | 10 | ☐ |
| 220V/1ph/60Hz [1] | ☐ | 15 | ☐ |
| 230V/1ph/60Hz [1] | ☐ | 20 | ☐ |
| 240V/1ph/60Hz [1] | ☐ | 25 | ☐ |
| 200V/3ph/50-60Hz [3] | ☐ | 30 | ☐ |
| 208V/3ph/50-60Hz [3] | ☐ | 40 | ☐ |
| 220V/3ph/50-60Hz [4] | ☐ | 50 | ☐ |
| 230V/3ph/50-60Hz [4] | ☐ | 60 | ☐ |
| 240V/3ph/50-60Hz [4] | ☐ | 75 | ☐ |
| 380V/3ph/50-60Hz [5] | ☐ | 100 | ☐ |
| 400V/3ph/50-60Hz [5] | ☐ | 125 | ☐ |
| 415V/3ph/50-60Hz [5] | ☐ | 150 | ☐ |
| 440V/3ph/50-60Hz [6] | ☐ | 200 | ☐ |
| 460V/3ph/50-60Hz [6] | ☐ | 250 | ☐ |
| 480V/3ph/50-60Hz [6] | ☐ | 300 | ☐ |
| 575V/3ph/60Hz [6] | ☐ | 350 | ☐ |
| 600V/3ph/60Hz [6] | ☐ | 400 | ☐ |
| | | 450 | ☐ |
| | | 500 | ☐ |

| Voltage | Select Voltage | kW [2] | Select kW |
|---|---|---|---|
| 380V/3ph/50-60Hz | ☐ | 4 | ☐ |
| 400V/3ph/50-60Hz | ☐ | 5.5 | ☐ |
| 415V/3ph/50-60Hz | ☐ | 7.5 | ☐ |
| | | 11 | ☐ |
| | | 15 | ☐ |
| | | 18.5 | ☐ |
| | | 22 | ☐ |
| | | 30 | ☐ |
| | | 37 | ☐ |
| | | 45 | ☐ |
| | | 55 | ☐ |
| | | 75 | ☐ |
| | | 90 | ☐ |
| | | 110 | ☐ |
| | | 132 | ☐ |
| | | 160 | ☐ |
| | | 200 | ☐ |
| | | 250 | ☐ |
| | | 315 | ☐ |
| | | 355 | ☐ |
| | | 400 | ☐ |
| | | 450 | ☐ |

Notes: [1] Only available for Model GPA. Maximum power rating is 30HP.
[2] kW power ratings only available for Models GPA, GPS and GPY.
[3] Maximum power rating is 200HP.
[4] Maximum power rating is 250HP.
[5] Maximum power rating is 450HP.
[6] Maximum power rating is 500HP.


This is a Marketing document. Please consult factory for more information.
Manufacturer reserves the right to modify this information without notice

| | | | |
|---|---|---|---|
| **Standard, Listings, Approvals and Certifications** | **Built to NFPA 20** | | |
| | **Underwriters Laboratory (UL)** | UL218 - Fire Pump Controllers | |
| | **FM Global** | Class 1321/1323 | |
| | **New York City** | Accepted for use in the City of New York by the Department of Buildings | |
| | **CE Mark** | Various EN, IEC & CEE directives and standards | |
| | Built in Canada or U.A.E | Built in Europe | |
| | ☐ CE Mark Option | Supplied as Standard | |
| **Enclosure** | **Protection Rating** | | |
| | Built in Canada or U.A.E | Built in Europe | |
| | ☐ Standard: NEMA 2 | ☐ Standard: IP55 | |
| | **Optional** | | |
| | ☐ NEMA 12 | ☐ NEMA 4X-304 sst painted | ☐ IP54 |
| | ☐ NEMA 3 | ☐ NEMA 4X-304 sst brushed finish | ☐ IP55 |
| | ☐ NEMA 3R | ☐ NEMA 4X-316 sst painted | ☐ IP65 |
| | ☐ NEMA 4 | ☐ NEMA 4X-316 sst brushed finish | ☐ IP66 |
| | **Accessories**<br>• Bottom entry gland plate<br>• Lifting Lugs<br>• Keylock handle | **Paint Specifications**<br>• Red RAL3002<br>• Powder coating<br>• Glossy textured finish | |

Short Circuit Withstand Ratings

| HP | 200V to 208V 50/60Hz/3ph | | | 220V to 240V 50/60Hz/3ph | | | 380V to 415V 50/60Hz/3ph | | | 440V to 480V 50/60Hz/3ph | | | 575V to 600V 60Hz/3ph | | |
|---|---|---|---|---|---|---|---|---|---|---|---|---|---|---|---|
| | Standard | Inter-mediate Option D13 ☐ | High Option D13B ☐ | Standard | Inter-mediate Option D13 ☐ | High Option D13B ☐ | Standard | Inter-mediate Option D13 ☐ | High Option D13B ☐ | Standard | Inter-mediate Option D13 ☐ | High Option D13B ☐ | Standard | Inter-mediate Option D13 ☐ | High Option D13B ☐ |
| ≤150 | 100kA | 150kA | 200kA | 100kA | 150kA | 200kA | 100kA | 150kA | 200kA | 100kA | 150kA | 200kA | 50kA | 100kA | - |
| 200 | 50kA | 100kA | - | | | | | | | | | | | | |
| 250 | - | - | - | 50kA | 100kA | - | | | | | | | | | |
| 300 | - | - | - | - | - | - | | 100kA | - | | | | | | |
| 350 | - | - | - | - | - | - | | | - | | | | | | |
| 400 | - | - | - | - | - | - | 50kA | | - | | | | | | |
| 450 | - | - | - | - | - | - | 30kA | | - | 50kA | 100kA | - | | | |
| 500 | - | - | - | - | - | - | | | - | | | - | | | |

| | |
|---|---|
| **Ambient Temperature Rating** | **Standard**:<br>☐ 4°C to 40°C / 39°F to 104°F<br>**Optional**:<br>☐ 4°C to 55°C / 39°F to 131°F<br>Controllers built in Dubai, UAE (Tornatech FZE) are supplied standard with 55°C rating. |
| **Surge Suppression** | Surge arrestor rated to suppress surges above line voltage |
| **Disconnecting Means** | • Isolating switch and circuit breaker assembly:<br>- Door interlocked in the ON position<br>- Isolating switch rated not less than 115% of motor full load current<br>- Circuit breaker continuous rating not less than 115% of motor full load current<br>- Overcurrent sensing non-thermal type, magnetic only<br>- Instantaneous trip setting of not more than 20 times the motor full load current<br>• Common flange mounted operating handle |
| **Service Entrance Rating** | Suitable as service entrance equipment (not applicable for installations in Canada). |
| **Emergency Start Handle** | • Flange mounted<br>• Pull and latch activation<br>• Integrated limit switch<br>• Across the line start (direct on line) |
| **Locked Rotor Protector** | • Operate shunt trip to open circuit breaker<br>• Factory set at 600% of motor full load current<br>• Trip between 8 and 20 seconds |
| **Electrical Readings** | • Voltage phase to phase (normal power)<br>• Amperage of each phase when motor is running |
| **Pressure Readings** | • Continuous system pressure display<br>• Cut-in and Cut-out pressure settings |
| **Pressure and Event recorder** | • Pressure readings with date stamp<br>• Event recording with date stamp<br>• Under regular maintained operation, events are stored in memory for the life of the controller.<br>• Data viewable on operator interface display screen<br>• Downloadable by USB port to external memory device or wireless connection to manufacturers App (mobile device). |
| **Pressure Sensing** | • Pressure transducer and run test solenoid valve assembly for fresh water application<br>• Pressure sensing line connection 1/2” Female NPT<br>• Drain connection 3/8”<br>• Rated for 0-500PSI working pressure (standard display at 0-300PSI)<br>• Externally mounted with protective cover |


This is a Marketing document. Please consult factory for more information.
Manufacturer reserves the right to modify this information without notice

| | |
|---|---|
| **Audible Alarm** | Alarm buzzer - 85dB at 3 meters |
| **Visual Indications** | • Power available<br>• Motor run<br>• Periodic test<br>• Manual start<br>• Deluge valve start<br>• Remote automatic start<br>• Remote manual start<br>• Emergency start<br>• Pump on demand/Automatic start<br>• Pump room temperature (ºF or ºC)<br>• Lockout |
| **Visual & Audible Alarms** | Visual<br>• Control voltage not healthy<br>• Invalid cut-in<br>• Lock rotor current<br>• Loss of power<br>• Low ambient temperature<br>• Low water level<br>• Motor trouble<br>• Phase reversal (normal power)<br>• Overcurrent<br>• Overvoltage<br>• Phase loss L1<br>• Phase loss L2<br>• Phase loss L3<br>• Phase unbalanced<br>• Pressure transducer fault detected<br>• Pump on demand<br>• Pump room alarm<br>• Service required<br>• Undercurrent<br>• Undervoltage<br>• Check weekly test solenoid<br>• Weekly test cut-in reached<br>Visual and audible<br>• Fail to start |
| **Remote Alarm Contacts** | DPDT-8A-250V.AC<br>• Power available<br>• Phase reversal<br>• Motor run<br>• Common pump room alarm (field re-assignable)**<br>• Overvoltage<br>• Undervoltage<br>• Phase unbalance<br>• Low pump room temperature<br>• High Pump room temperature<br>• Common motor trouble (field re-assignable)**<br>• Overcurrent<br>• Fail to start<br>• Undercurrent<br>• Ground fault<br>• Free (field programmable)** |

**Tornatech reserves the right to use any of these three alarm points for special specific application requirements.


This is a Marketing document. Please consult factory for more information.
Manufacturer reserves the right to modify this information without notice

| | | | |
|---|---|---|---|
| **ViZiTouch V2.1 Operator Interface** | • Embedded microcomputer with software PLC logic<br>• 7.0” color touch screen (HMI technology)<br>• Upgradable software<br>• Multi-language | | |
| **Communication Protocol Capability** | • Protocol: Modbus<br>• Connection type: Shielded female connector RJ45<br>• Frame Format: TCP/IP<br>• Addresses: See bulletin MOD-GPx | | |
| **Operation** | **Automatic Start** | • Start on pressure drop<br>• Remote start signal from automatic device<br>• Deluge valve start | |
| | **Manual Start** | • Start pushbutton<br>• Run test pushbutton<br>• Remote start from manual device | |
| | **Stopping** | • Manual with Stop pushbutton<br>• Automatic after expiration of minimum run timer *** | |
| | **Timers** | Field Adjustable & Visual Countdown | • Minimum run timer ***(off delay)<br>• Sequential start timer (on delay)<br>• Periodic test timer |
| | **Actuation** | Visual Indication | • Pressure<br>• Non-pressure |
| | **Mode** | | • Automatic<br>• Non-automatic |

***Can only be used if approved by the AHJ


This is a Marketing document. Please consult factory for more information.
Manufacturer reserves the right to modify this information without notice

| | | |
|---|---|---|
| ☐ | A4 | Flow switch provision |
| ☐ | A8 | Foam pump application w/o pressure transducer and run test solenoid valve. |
| ☐ | A9 | Low zone pump control function |
| ☐ | A10 | Middle zone pump control function |
| ☐ | A11 | High zone pump control function |
| ☐ | A13 | Non-pressure actuated controller w/o pressure transducer and run test solenoid valve |
| ☐ | A16 | Lockout/interlock circuit from equipment installed inside the pump room |
| ☐ | B11 | Built in alarm panel (120V.AC supervisory power) providing indication for:<br>• Audible alarm & silence pushbutton for motor run, phase reversal, loss of phase.<br>• Pilot lights for loss of phase & supervisory power available |
| ☐ | B11B | Built in alarm panel same as B11 but 220-240VAC supervisory power |
| ☐ | B19A | High motor temperature c/w thermoster relay and alarm contacts (DPDT) |
| ☐ | B19B | High motor temperature c/w PT100 relay and alarm contacts (DPDT) |
| ☐ | B21 | Ground fault alarm detection c/w visual indication and alarm contact (DPDT) |
| ☐ | B25 | Digital flow test feature complete with access to Pump Curve menu, display of flow rate on main screen and 25ft cable (Option ONLY suitable for connection with Tornatech digital flow meter) |
| ☐ | C1 | Extra motor run alarm contact (DPDT) |
| ☐ | C4 | Periodic test alarm contact (DPDT) |
| ☐ | C6 | Low discharge pressure alarm contact (DPDT) |
| ☐ | C7 | Low pump room temperature alarm contact (DPDT) |
| ☐ | C10 | Low water reservoir level alarm contact (DPDT) |
| ☐ | C11 | High electric motor temperature alarm contact (DPDT) |
| ☐ | C12 | High electric motor vibration c/w visual indication and alarm contact (DPDT) |
| ☐ | C14 | Pump on demand / automatic start alarm contact (DPDT) |
| ☐ | C15 | Pump fail to start alarm contact (DPDT) |
| ☐ | C16 | Control voltage healthy alarm contact (DPDT) |
| ☐ | C17 | Flow meter valve loop open c/w visual indication and alarm contact (DPDT) |
| ☐ | C18 | High water reservoir level c/w visual indication and alarm contact (DPDT) |
| ☐ | C19 | Emergency start alarm contact (DPDT) |
| ☐ | C20 | Manual start alarm contact (DPDT) |
| ☐ | C21 | Deluge valve start alarm contact (DPDT) |
| ☐ | C22 | Remote automatic start alarm contact (DPDT) |
| ☐ | C23 | Remote manual start alarm contact (DPDT) |
| ☐ | C24 | High pump room temperature alarm contact (DPDT) |
| ☐ | C25 | Second set of standard alarm contacts (DPDT) (Typical for city of Los Angeles and Denver) |
| ☐ | Cx | Additional visual and alarm contact (Specify function) (DPDT) |
| ☐ | D1 | Low suction pressure transducer for fresh water rated at 0-500PSI with visual indication and alarm contact |
| ☐ | D1A | Low suction pressure transducer for sea water rated at 0-500PSI with visual indication and alarm contact |
| ☐ | D5 | Pressure transducer and run test solenoid valve for fresh water rated for 0-500PSI (for factory calibration purposes only) |
| ☐ | D5D | Pressure transducer and run test solenoid valve for sea water rated for 0-500PSI |
| ☐ | D10 | Omit mounting feet (when applicable) |
| ☐ | D14 | Anti-condensation heater & thermostat |
| ☐ | D14A | Anti-condensation heater & humidistat |
| ☐ | D14B | Anti-condensation heater & thermostat & humidistat |
| ☐ | D15 | Tropicalization |
| ☐ | D18 | CE Mark with factory certificate |
| ☐ | D27 | Motor heater connection (external single phase power source and heater on/off contact) |
| ☐ | D27A | Motor heater connection (internal single phase power source and heater on/off contact) |
| ☐ | D28 | Customized drawing set |

*For fire pump controller section only.
Note: Options chosen from this page are not electrically represented on the wiring schematics in this submittal package.


This is a Marketing document. Please consult factory for more information.
Manufacturer reserves the right to modify this information without notice

| | |
|---|---|
| ☐ D34A | Field programmable I/O board - 5 Input / 5 output |
| ☐ D36 | Redundant pressure transducer for fresh water rated for 0-500PSI |
| ☐ D36A | Redundant pressure transducer for sea water rated for 0-500PSI |
| ☐ D43 | Seismic Certification compliant to CBC 2019, IBC 2018 rigid base/wall mounted only |
| ☐ D44 | Special Seismic Certification compliant to OSHPD rigid base/wall mounted only |

| | |
|---|---|
| ☐ L01 | Other language and English (bilingual) |
| ☐ L02 | French |
| ☐ L03 | Spanish |
| ☐ L04 | German |
| ☐ L05 | Italian |
| ☐ L06 | Polish |
| ☐ L07 | Romanian |
| ☐ L08 | Hungarian |
| ☐ L09 | Slovakian |
| ☐ L10 | Croatian |
| ☐ L11 | Czech |
| ☐ L12 | Portuguese |
| ☐ L13 | Dutch |
| ☐ L15 | Turkish |
| ☐ L16 | Swedish |
| ☐ L21 | Danish |
| ☐ L25 | Chinese |
| ☐ L28 | Finnish |
| ☐ L29 | Norwegian |

Additional Options:

☐ _____

☐ _____

☐ _____

☐ _____

☐ _____

Note: Options chosen from this page are not electrically represented on the wiring schematics in this submittal package.



This is a Marketing document. Please consult factory for more information.
Manufacturer reserves the right to modify this information without notice

## ViZiTouch V2.1 Operator Interface

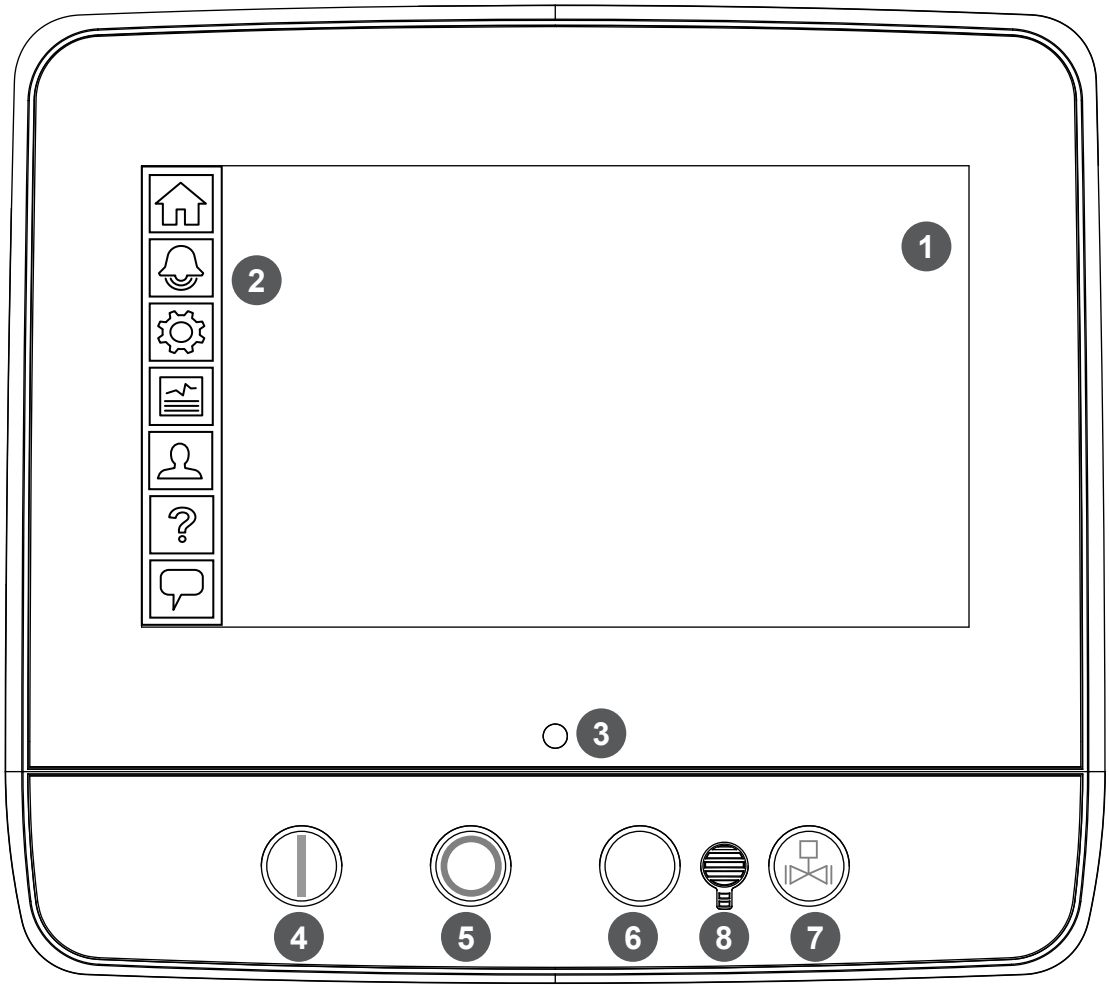


1 - Color touch screen
2 - Onscreen menu
- HOME page
- ALARM page
- CONFIGURATION page
- HISTORY page
- SERVICE page
- MANUAL page
- LANGUAGES page

3 - Power LED (3 colors)
4 - START button
5 - STOP button
6 - Not Used
7 - RUN TEST button
8 - Alarm buzzer


This is a Marketing document. Please consult factory for more information.
Manufacturer reserves the right to modify this information without notice

TORNATECH

© Tornatech, Inc. Not for construction.
Subject to change without notice.

| | BY | DD/MM/YY |
|---|---|---|
| DRAWN BY | MLC | 04/10/24 |
| FINAL APPROVAL | FC | 07/11/24 |

# ELECTRIC FIRE PUMP CONTROLLER

## MODEL: GPA/GPP/GPY

BUILT TO THE LATEST EDITION OF THE NFPA20 & NFPA70

NYC Dpt of Building Approved

THIRD ANGLE PROJECTION

DRAWING NUMBER GPX-DI940/E
DWG REV. 0
SHEET 1 OF 1

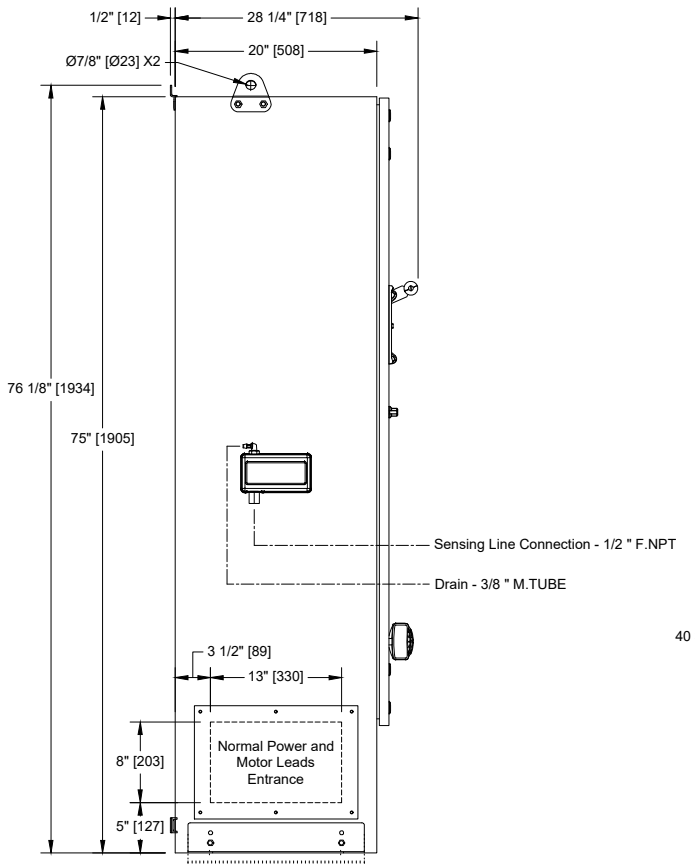


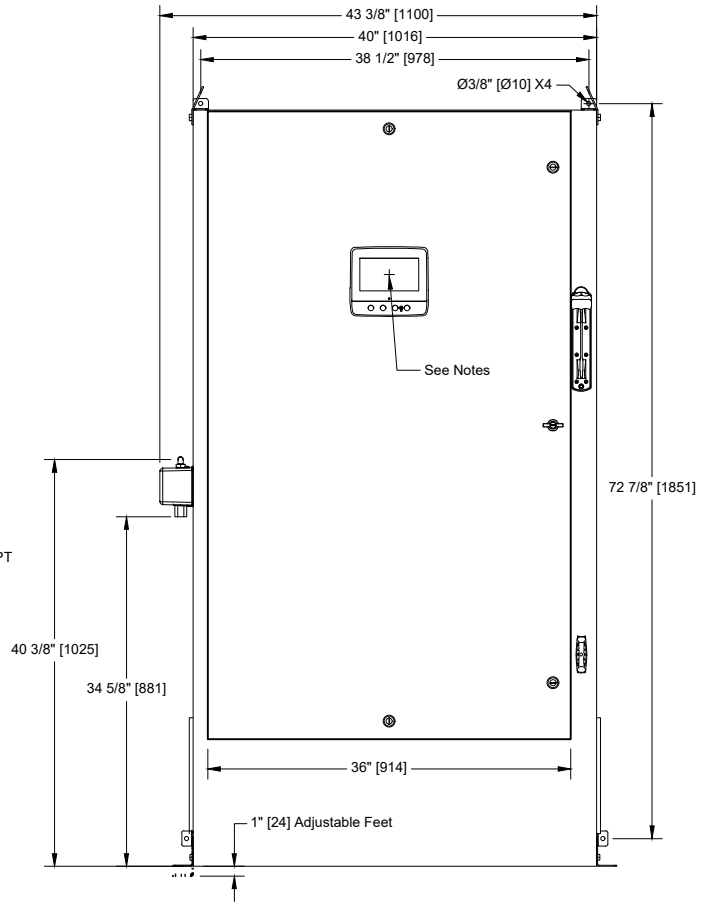


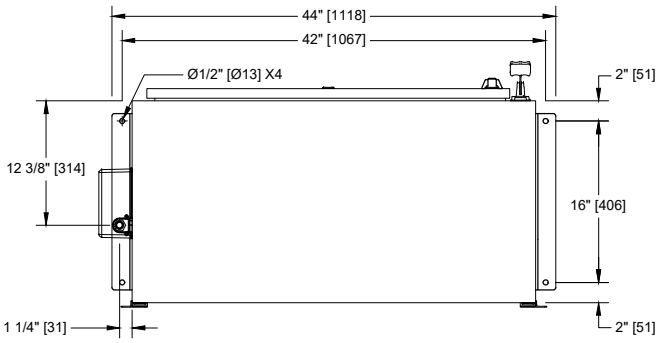


| Voltage / Power Table | | |
|---|---|---|
| Voltage | Min HP | Max HP |
| 208 | 200 | |
| 220 - 240 | 250 | |
| 380 - 400 - 415 | 350 | 450 |
| 440 - 480 | 400 | 500 |
| 600 | Not Applicable | |

## Notes:

- Standard: NEMA 2
- Standard paint : textured red RAL 3002.
- All dimensions are in inches [millimeters].
- Center of screen: 58-3/4" [1491] from bottom.
- Side conduit entrance through removable gland plate recommended.
- Use watertight conduit and connector only.
- Protect equipment against drilling chips.
- Door swing equal to door width.

Copyright © 2025 Tornatech Inc. All right reserved. This drawing and the information contained or depicted herein are the sole property of Tornatech Inc. Copies are communicated to the recipient in strict confidence and may not be retransmitted, published, reproduced, copied or used in any manner, including as the basis for the manufacture or sale of any products, without the express prior written consent of Tornatech Inc.

TORNATECH

© Tornatech, Inc. Not for construction.
Subject to change without notice.

| | BY | DD/MM/YY |
|---|---|---|
| DRAWN BY | ACD | 28/02/23 |
| FINAL APPROVAL | FC | 28/02/23 |

# ELECTRIC FIRE PUMP CONTROLLER
# FULL VOLTAGE / ACROSS THE LINE

## MODEL:GPA

BUILT TO THE LATEST EDITION OF THE NFPA20 & NFPA70

NYC Dpt of Building Approved

DRAWING NUMBER
GPA-WS800/E
DWG REV. 0
SHEET 1 OF 2

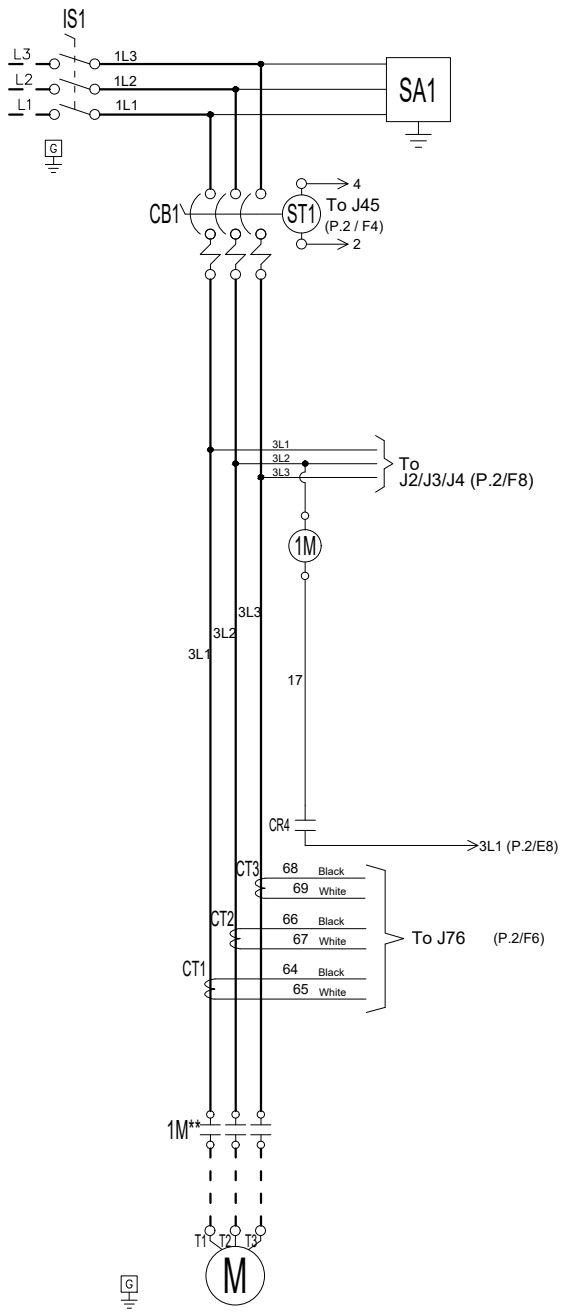


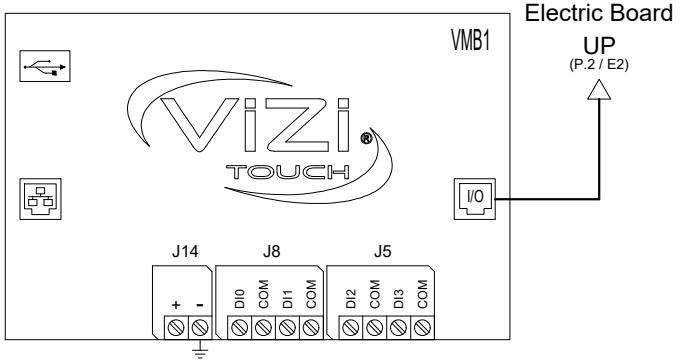


| Legend | |
|---|---|
| 1M | Contactor |
| AB | Alarm Bell |
| CB | Circuit Breaker |
| CR | Control Relay |
| CT | Current Transformer |
| EB | Electric I/O Board |
| IS | Isolating Switch |
| J | Jumper |
| LS | Limit Switch |
| PT | Pressure Transducer |
| SA | Surge Arrester |
| ST | Shunt Trip |
| SV | Solenoid Valve |
| VMB | Main Board |
| XTR | Transformer |

Copyright © 2025 Tornatech Inc. All right reserved. This drawing and the information contained or depicted herein are the sole property of Tornatech Inc. Copies are communicated to the recipient in strict confidence and may not be retransmitted, published, reproduced, copied or used in any manner, including as the basis for the manufacture or sale of any products, without the express prior written consent of Tornatech Inc.

TORNATECH

© Tornatech, Inc. Not for construction.
Subject to change without notice.

| | BY | DD/MM/YY |
|---|---|---|
| DRAWN BY | ACD | 28/02/23 |
| FINAL APPROVAL | FC | 28/02/23 |

# ELECTRIC FIRE PUMP CONTROLLER
# FULL VOLTAGE / ACROSS THE LINE

## MODEL:GPA

BUILT TO THE LATEST EDITION OF THE NFPA20 & NFPA70

NYC Dpt of Building Approved

DRAWING NUMBER GPA-WS800/E
DWG REV. 0
SHEET 2 OF 2

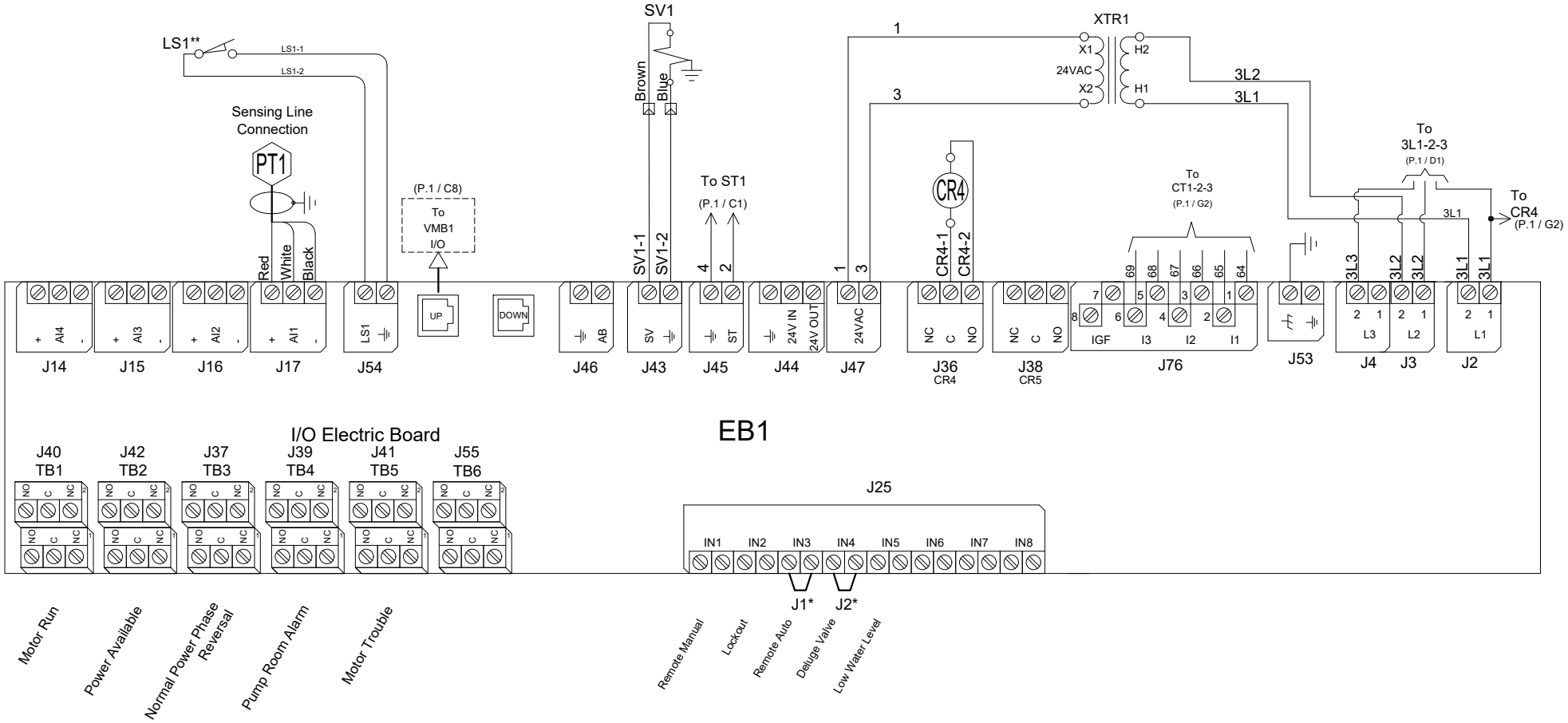


* Remove jumper to use this feature
** Contact closes when emergency start is in "ON" position

Copyright © 2025 Tornatech Inc. All right reserved. This drawing and the information contained or depicted herein are the sole property of Tornatech Inc. Copies are communicated to the recipient in strict confidence and may not be retransmitted, published, reproduced, copied or used in any manner, including as the basis for the manufacture or sale of any products, without the express prior written consent of Tornatech Inc.

TORNATECH

© Tornatech, Inc. Not for construction. Subject to change without notice.

| | | BY | DD/MM/YY |
|---|---|---|---|
| DRAWN BY | | MLC | 04/10/24 |
| FINAL APPROVAL | | FC | 07/11/24 |

# ELECTRIC FIRE PUMP CONTROLLER

## MODEL:GPX

BUILT TO THE LATEST EDITION OF THE NFPA20 & NFPA70

NYC Dpt of Building Approved

DRAWING NUMBER GPX-TD910/E

DWG REV. 0

SHEET 1 OF 1

**COPPER CONDUCTORS** for Isolating Switch (IS1).

Field Wiring According to Bending Space (AWG or MCM). Terminals L1 - L2 - L3

| Bending Space | 5 " (127 mm) | | | | | | | 8 " (203 mm) | | |
|---|---|---|---|---|---|---|---|---|---|---|
| HP / Voltage | 5 | 7.5 | 10 | 15 | 20 | 25 | 30 | 40 | 50 | 60 |
| 208 | 1x (10 to 1/0) | 1x (8 to 1/0) | 1x (8 to 1/0) | 1x (6 to 1/0) | 1x (4 to 1/0) | 1x (3 to 1/0) | 1x (2 to 1/0) | 1x (1/0 to 250) | 1x (3/0 to 250) | 1x (4/0 to 250) |
| 220 to 240 | 1x (10 to 1/0) | 1x (10 to 1/0) | 1x (8 to 1/0) | 1x (6 to 1/0) | 1x (4 to 1/0) | 1x (4 to 1/0) | 1x (3 to 1/0) | 1x (1 to 250) | 1x (2/0 to 250) | 1x (3/0 to 250) |
| 380 to 416 | 1x (10 to 1/0) | 1x (10 to 1/0) | 1x (10 to 1/0) | 1x (8 to 1/0) | 1x (8 to 1/0) | 1x (6 to 1/0) | 1x (6 to 1/0) | 1x (4 to 1/0) | 1x (3 to 1/0) | 1x (1 to 1/0) |
| 440 to 480 | 1x (10 to 1/0) | 1x (10 to 1/0) | 1x (10 to 1/0) | 1x (10 to 1/0) | 1x (8 to 1/0) | 1x (8 to 1/0) | 1x (6 to 1/0) | 1x (6 to 1/0) | 1x (4 to 1/0) | 1x (3 to 1/0) |
| 600 | 1x (10 to 1/0) | 1x (10 to 1/0) | 1x (10 to 1/0) | 1x (10 to 1/0) | 1x (10 to 1/0) | 1x (8 to 1/0) | 1x (8 to 1/0) | 1x (6 to 1/0) | 1x (6 to 1/0) | 1x (4 to 1/0) |

| Bending Space | 12 " (305 mm) | | | | 16 " (406 mm)*** | | | | | | |
|---|---|---|---|---|---|---|---|---|---|---|---|
| HP / Voltage | 75 | 100 | 125 | 150 | 200 | 250 | 300 | 350 | 400 | 450 | 500 |
| 208 | 1x (300 to 500) | 1x (500) | 2x (4/0 to 500) | 2x (250 to 500) | 3x (4/0 to 500) | -------- | -------- | -------- | -------- | -------- | -------- |
| 220 to 240 | 1x (250) | 1x (350 to 500) | 2x (3/0 to 250) | 2x (4/0 to 500) | 2x (350 to 500) | 3x (250 to 500) | -------- | -------- | -------- | -------- | -------- |
| 380 to 416 | 1x (1/0 to 250) | 1x (3/0 to 250) | 1x (250) | 1x (300 to 500) | 1x (500) | 2x (4/0 to 500) | 2x (300 to 500) | 3x (4/0 to 500) | 3x (250 to 500) | 4x (3/0 to 500) | -------- |
| 440 to 480 | 1x (1 to 250) | 1x (2/0 to 250) | 1x (3/0 to 250) | 1x (4/0 to 250) | 1x (350 to 500) | 1x (500) | 2x (4/0 to 500) | 2x (300 to 500) | 3x (3/0 to 500) | 3x (4/0 to 500) | 3x (250 to 500) |
| 600 | 1x (3 to 1/0) | 1x (1 to 250) | 1x (2/0 to 250) | 1x (3/0 to 250) | 1x (250 to 500) | 1x (350 to 500) | 1x (500) | 2x (4/0 to 500) | 2x (250 to 500) | 2x (300 to 500) | 2x (350 to 500) |
| Bending Space | 5 " (127 mm) | 8 " (203 mm) | | | 12 " (305 mm) | | | | | | |

**ALUMINUM CONDUCTORS** for Isolating Switch (IS1).***

Field Wiring According to Bending Space (AWG or MCM). Terminals L1 - L2 - L3

| Bending Space | 5 " (127 mm) | | | | | | | 8 " (203 mm) | | 10 " (254 mm) |
|---|---|---|---|---|---|---|---|---|---|---|
| HP / Voltage | 5 | 7.5 | 10 | 15 | 20 | 25 | 30 | 40 | 50 | 60 |
| 208 | 1x (10 to 1/0) | 1x (6 to 1/0) | 1x (6 to 1/0) | 1x (4 to 1/0) | 1x (3 to 1/0) | 1x (1 to 1/0) | 1x (1/0) | 1x (3/0 to 250) | 1x (4/0 to 250) | 1x (300) ** or 1x (250) 90°C * |
| 220 to 240 | 1x (10 to 1/0) | 1x (8 to 1/0) | 1x (6 to 1/0) | 1x (4 to 1/0) | 1x (3 to 1/0) | 1x (2 to 1/0) | 1x (1 to 1/0) | 1x (2/0 to 250) | 1x (4/0 to 250) | 1x (250) |
| 380 to 416 | 1x (10 to 1/0) | 1x (10 to 1/0) | 1x (10 to 1/0) | 1x (6 to 1/0) | 1x (6 to 1/0) | 1x (4 to 1/0) | 1x (4 to 1/0) | 1x (2 to 1/0) | 1x (1 to 1/0) | 1x (1/0) |
| 440 to 480 | 1x (10 to 1/0) | 1x (10 to 1/0) | 1x (10 to 1/0) | 1x (8 to 1/0) | 1x (6 to 1/0) | 1x (6 to 1/0) | 1x (6 to 1/0) | 1x (4 to 1/0) | 1x (2 to 1/0) | 1x (1 to 1/0) |
| 600 | 1x (10 to 1/0) | 1x (10 to 1/0) | 1x (10 to 1/0) | 1x (10 to 1/0) | 1x (8 to 1/0) | 1x (6 to 1/0) | 1x (6 to 1/0) | 1x (4 to 1/0) | 1x (4 to 1/0) | 1x (2 to 1/0) |

| Bending Space | 12 " (305 mm) | | | | 16 " (406 mm)*** | | | | | | |
|---|---|---|---|---|---|---|---|---|---|---|---|
| HP / Voltage | 75 | 100 | 125 | 150 | 200 | 250 | 300 | 350 | 400 | 450 | 500 |
| 208 | 1x (400 to 500) | 1x (500) 90°C * | 2x (300 to 500) | 2x (350 to 500) | 3x (300 to 500) | -------- | -------- | -------- | -------- | -------- | -------- |
| 220 to 240 | 1x (350) ** N/A | 1x (500) | 2x (250 to 500) | 2x (300 to 500) | 2x (500) | 3x (400 to 500) | -------- | -------- | -------- | -------- | -------- |
| 380 to 416 | 1x (3/0 to 250) | 1x (250) | Consult Factory | 1x (500) | Consult Factory | 2x (300 to 500) | 2x (500) | 3x (300 to 500) | 3x (350 to 500) | 3x (400 to 500) | -------- |
| 440 to 480 | 1x (1/0 to 250) | 1x (3/0 to 250) | 1x (250) | 1x (250) 90°C * | 1x (500) | Consult Factory | 2x (300 to 500) | 2x (400 to 500) | 3x (250 to 500) | 3x (300 to 500) | 3x (350 to 500) |
| 600 | 1x (1 to 1/0) | 1x (2/0 to 250) | 1x (4/0 to 250) | 1x (4/0 to 250) | 1x (350 to 500) | 1x (500) | Consult Factory | 2x (300 to 500) | 2x (350 to 500) | 2x (400 to 500) | 2x (500) |
| Bending Space | 5 " (127 mm) | 8 " (203 mm) | | | 12 " (305 mm) | | | | | | |

*For standard enclosure, use 90°C aluminium wire. Consult Factory for Use of Conductors Rated Lower than 90°C.

** Consult Factory

*** Aluminum is not permitted in Canada.

## Power Terminals

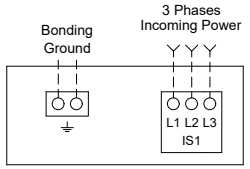


***Only for 16"(406 mm) bending space

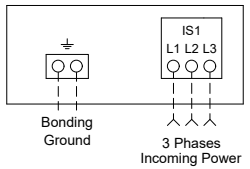


Notes:

1 - For proper wire sizing, refer to NFPA70 and NEC (USA) or CEC (Canada) or local code.

2 - Controller suitable for use as service equipment in USA.

3 - Controller use as service equipment prohibited in Canada.

4 - For more accurate motor connections refer to motor manufacturer or motor nameplate.

5 - Controller is phase sensitive. Incoming lines must be connected in ABC sequence.

Drawing for information only.
Manufacturer reserves the right to modify this drawing without notice.
Contact manufacturer for "As Built" drawing.

Copyright © 2025 Tornatech Inc. All right reserved. This drawing and the information contained or depicted herein are the sole property of Tornatech Inc. Copies are communicated to the recipient in strict confidence and may not be retransmitted, published, reproduced, copied or used in any manner, including as the basis for the manufacture or sale of any products, without the express prior written consent of Tornatech Inc.

TORNATECH

© Tornatech, Inc. Not for construction.
Subject to change without notice.

| | | BY | DD/MM/YY |
|---|---|---|---|
| DRAWN BY | | MLC | 04/10/24 |
| FINAL APPROVAL | | FC | 07/11/24 |

# ELECTRIC FIRE PUMP CONTROLLER

## MODEL: GPA

BUILT TO THE LATEST EDITION OF THE NFPA20 & NFPA70

NYC Dpt of Building Approved

DRAWING NUMBER GPX-TD911/E
DWG REV. 0
SHEET 1 OF 1

**COPPER CONDUCTORS** for Motor Connection (1M).
Field Wiring According to Bending Space (AWG or MCM). Terminals T1 - T2 - T3

| HP / Voltage | 5 | 7.5 | 10 | 15 | 20 | 25 | 30 | 40 | 50 | 60 |
|---|---|---|---|---|---|---|---|---|---|---|
| 208 | 1x (10 to 4) | 1x (8 to 4) | 1x (8 to 4) | 1x (6 to 4) | 1x (4) | 1x (3 to 2) | 1x (2) | 1x (1/0 to 2/0) | 1x (3/0) | 1x (4/0 to 300) |
| 220 to 240 | 1x (10 to 4) | 1x (10 to 4) | 1x (8 to 4) | 1x (6 to 4) | 1x (4) | 1x (4 to 2) | 1x (3 to 2) | 1x (1 to 2/0) | 1x (2/0 to 3/0) | 1x (3/0 to 300) |
| 380 to 416 | 1x (10 to 4) | 1x (10 to 4) | 1x (10 to 4) | 1x (8 to 4) | 1x (8 to 4) | 1x (6 to 4) | 1x (6 to 4) | 1x (4 to 2) | 1x (3 to 2) | 1x (1 to 2/0) |
| 440 to 480 | 1x (10 to 4) | 1x (10 to 4) | 1x (10 to 4) | 1x (10 to 4) | 1x (8 to 4) | 1x (8 to 4) | 1x (6 to 4) | 1x (6 to 4) | 1x (4 to 2) | 1x (3 to 2/0) |
| 600 | 1x (10 to 4) | 1x (10 to 4) | 1x (10 to 4) | 1x (10 to 4) | 1x (10 to 4) | 1x (8 to 4) | 1x (8 to 4) | 1x (6 to 4) | 1x (6 to 2) | 1x (4 to 2/0) |

| HP / Voltage | 75 | 100 | 125 | 150 | 200 | 250 | 300 | 350 | 400 | 450 | 500 |
|---|---|---|---|---|---|---|---|---|---|---|---|
| 208 | 1x (300) | 2x (2/0 to 300) | 2x (4/0 to 300) | 2x (250 to 300) | 2x (400 to 600) | -------- | -------- | -------- | -------- | -------- | -------- |
| 220 to 240 | 1x (250 to 300) | 2x (2/0 to 300) | 2x (3/0 to 300) | 2x (4/0 to 300) | 2x (350 to 600) | 2x (500 to 600) | -------- | -------- | -------- | -------- | -------- |
| 380 to 416 | 1x (1/0 to 3/0) | 1x (3/0) | 1x (250 to 300) | 1x (300) | 2x (3/0 to 300) | 2x (4/0 to 300) | 2x (300 to 600) | 2x (400 to 600) | 2x (500 to 600) | 2x (600) | -------- |
| 440 to 480 | 1x (1 to 2/0) | 1x (2/0 to 3/0) | 1x (3/0 to 300) | 1x (4/0 to 300) | 2x (1/0 to 300) | 2x (3/0 to 300) | 2x (4/0 to 600) | 2x (300 to 600) | 2x (350 to 600) | 2x (400 to 600) | 2x (500 to 600) |
| 600 | 1x (3 to 2/0) | 1x (1 to 3/0) | 1x (2/0 to 300) | 1x (3/0 to 300) | 2x (1 to 300) | 2x (2/0 to 300) | 2x (3/0 to 300) | 2x (4/0 to 600) | 2X (250 to 600) | 2x (300 to 600) | 2x (350 to 600) |

**ALUMINUM CONDUCTORS** for Contactor (1M).***
Field Wiring According to Bending Space (AWG or MCM). Terminals T1 - T2 - T3

| HP / Voltage | 5 | 7.5 | 10 | 15 | 20 | 25 | 30 | 40 | 50 | 60 |
|---|---|---|---|---|---|---|---|---|---|---|
| 208 | 1x (10 to 2/0) ** | 1x (10 to 2/0) ** | 1x (6 to 2/0) ** | 1x (4 to 2/0) ** | 1x (3 to 2/0) ** | 1x (1 to 2/0) ** | 1x (1/0 to 2/0) ** | 1x (2/0) 90°C * | Consult Factory | 1x (300) |
| 220 to 240 | 1x (10 to 2/0) ** | 1x (10 to 2/0) ** | 1x (8 to 2/0) ** | 1x (4 to 2/0) ** | 1x (3 to 2/0) ** | 1x (2 to 2/0) ** | 1x (1 to 2/0) ** | 1x (2/0) | 1x (3/0) 90°C * | 1x (250 to 300) |
| 380 to 416 | 1x (12 to 2/0) ** | 1x (12 to 2/0) ** | 1x (10 to 2/0) ** | 1x (8 to 2/0) ** | 1x (6 to 2/0) ** | 1x (4 to 2/0) ** | 1x (4 to 2/0) ** | 1x (2 to 2/0) ** | 1x (1 to 2/0) ** | 1x (1/0 to 2/0) |
| 440 to 480 | 1x (12 to 2/0) ** | 1x (12 to 2/0) ** | 1x (10 to 2/0) ** | 1x (8 to 2/0) ** | 1x (8 to 2/0) ** | 1x (6 to 2/0) ** | 1x (6 to 2/0) ** | 1x (4 to 2/0) ** | 1x (2 to 2/0) ** | 1x (1 to 2/0) |
| 600 | 1x (12 to 2/0) ** | 1x (12 to 2/0) ** | 1x (12 to 2/0) ** | 1x (10 to 2/0) ** | 1x (8 to 2/0) ** | 1x (8 to 2/0) ** | 1x (8 to 2/0) ** | 1x (4 to 2/0) ** | 1x (4 to 2/0) ** | 1x (2 to 2/0) |

| HP / Voltage | 75 | 100 | 125 | 150 | 200 | 250 | 300 | 350 | 400 | 450 | 500 |
|---|---|---|---|---|---|---|---|---|---|---|---|
| 208 | 1x (300) 90°C * | 2x (4/0 to 300) | 2x (300) | 2x (300) 90°C * | 2x (600) | -------- | -------- | -------- | -------- | -------- | -------- |
| 220 to 240 | 1x (300) 90°C * | Consult Factory | 2x (250 to 300) | 2x (300) | 2x (500 to 600) | 2x (600) | -------- | -------- | -------- | -------- | -------- |
| 380 to 416 | 1x (3/0) | Consult Factory | 1x (300) 90°C * | Consult Factory | 2x (4/0 to 300) | 2x (300) | 2x (500 to 600) | 2x (600) | 2x (600) 90°C * | 2x (600) 90°C * | -------- |
| 440 to 480 | 1x (1/0 to 2/0) | 1x (3/0) | 1x (250 to 300) | 1x (300) | 2x (3/0 to 300) | 2x (250 to 300) | 2x (300 to 600) | 2x (400 to 600) | 2x (500 to 600) | 2x (600) | 2x (600) 90°C * |
| 600 | 1x (1 to 2/0) | 1x (2/0 to 3/0) | 1x (4/0 to 300) | 1x (4/0 to 300) | 2x (1/0 to 300) | 2x (3/0 to 300) | 2x (4/0 to 300) | 2x (300 to 600) | 2x (350 to 600) | 2x (400 to 600) | 2x (500 to 600) |

*For standard enclosure, use 90°C aluminium wire. Consult Factory for Use of Conductors Rated Lower than 90°C.
** Option V659 required.
*** Aluminum is not permitted in Canada.

Motor Terminals

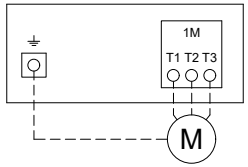


**Model: GPA**

Notes:
1 - For proper wire sizing, refer to NFPA70 and NEC (USA) or CEC (Canada) or local code.
2 - Controller suitable for use as service equipment in USA.
3 - Controller use as service equipment prohibited in Canada.
4 - For more accurate motor connections refer to motor manufacturer or motor nameplate.
5 - Controller is phase sensitive. Incoming lines must be connected in ABC sequence.

Drawing for information only.
Manufacturer reserves the right to modify this drawing without notice.
Contact manufacturer for "As Built" drawing.

Copyright © 2025 Tornatech Inc. All right reserved. This drawing and the information contained or depicted herein are the sole property of Tornatech Inc. Copies are communicated to the recipient in strict confidence and may not be retransmitted, published, reproduced, copied or used in any manner, including as the basis for the manufacture or sale of any products, without the express prior written consent of Tornatech Inc.

TORNATECH

© Tornatech, Inc. Not for construction.
Subject to change without notice.

| | BY | DD/MM/YY |
|---|---|---|
| DRAWN BY | ACD | 18/12/23 |
| FINAL APPROVAL | FC | 19/12/23 |

# ELECTRIC FIRE PUMP CONTROLLER

## MODEL:GPX

BUILT TO THE LATEST EDITION OF THE NFPA20 & NFPA70

NYC Dpt of Building Approved

DRAWING NUMBER
GPX-TD803/E
DWG REV. 0
SHEET 1 OF 1

## Field Connections

Terminals Wire Size:
24 - 12 AWG
0.5 Nm

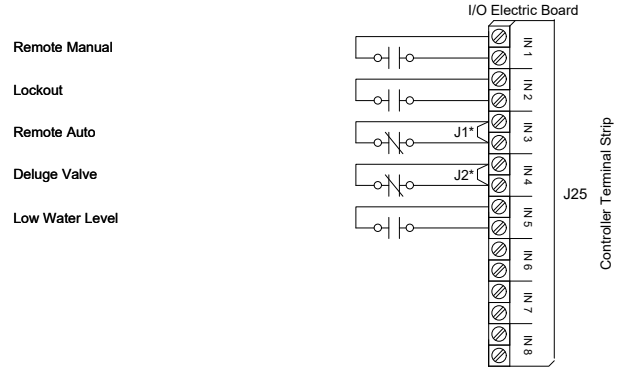


## Network Connections

Terminals Wire Size:
Shielded Female Connector RJ45

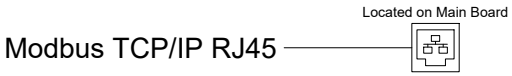


## Alarm Contacts

Terminals Wire Size:
24 - 12 AWG
0.5 Nm

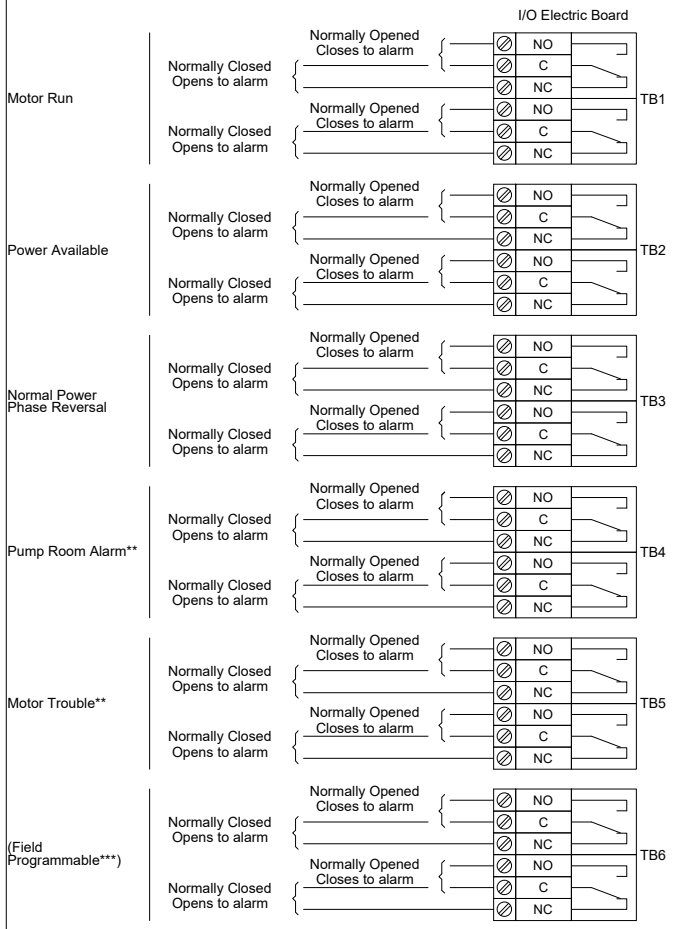


* Remove jumper to use this feature
** Re-assignable
*** Not available on GPS models

Copyright © 2025 Tornatech Inc. All right reserved. This drawing and the information contained or depicted herein are the sole property of Tornatech Inc. Copies are communicated to the recipient in strict confidence and may not be retransmitted, published, reproduced, copied or used in any manner, including as the basis for the manufacture or sale of any products, without the express prior written consent of Tornatech Inc.

TORNATECH

© Tornatech, Inc. Not for construction.
Subject to change without notice.

| | BY | DD/MM/YY |
|---|---|---|
| DRAWN BY | ACD | 21/11/24 |
| FINAL APPROVAL | FC | 21/11/24 |

# ELECTRIC FIRE PUMP CONTROLLER MOTOR CONNECTIONS

## MODEL: GPA/GPR/GPS

DRAWING NUMBER GPX-MC001/E
DWG REV. 2
SHEET 1 OF 1

IMPORTANT : - NFPA 20-2022 Art. 9.5.3.2 :
*A MOTOR TERMINAL CONNECTING DIAGRAM FOR MULTIPLE LEAD MOTORS SHALL BE FURNISHED BY THE MOTOR MANUFACTURER.*

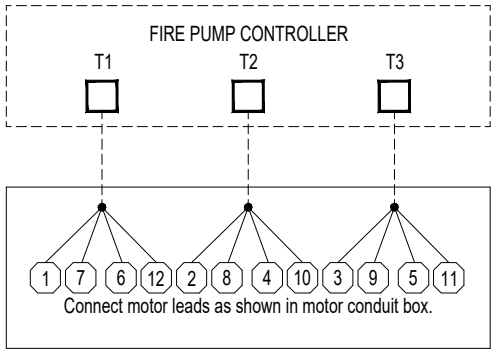


12 LEADS MOTOR
FOR DUAL VOLTAGE MOTOR
OPERATING ON THE LOWER
OF THE TWO VOLTAGES

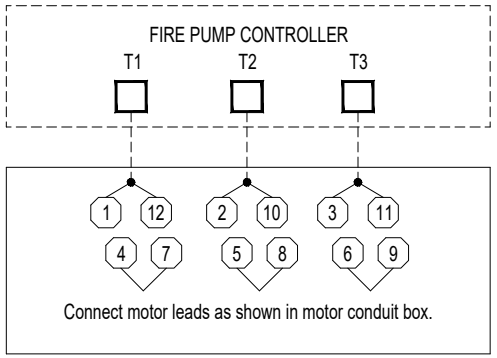


12 LEADS MOTOR
FOR DUAL VOLTAGE MOTOR
OPERATING ON THE HIGHER
OF THE TWO VOLTAGES

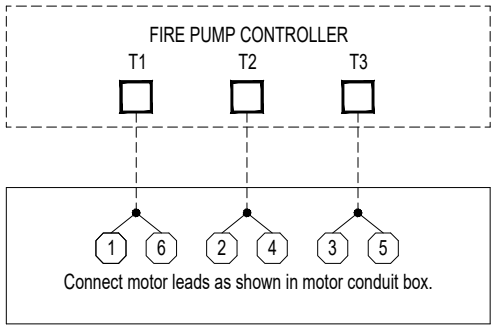


6 LEADS MOTOR
FOR DELTA CONNECTION

**Tornatech Inc. ASSUMES NO LIABILITY FOR INCORRECT WIRING OF THE MOTOR TO THE CONTROLLER**

WARNING :
- THIS DRAWING IS FOR GENERAL INFORMATION.
- CONSULT MOTOR MANUFACTURER BEFORE CONNECTING TO CONTROLLER.
- CONNECT MOTOR LEADS AS SHOWN IN MOTOR CONDUIT BOX

Copyright © 2025 Tornatech Inc. All right reserved. This drawing and the information contained or depicted herein are the sole property of Tornatech Inc. Copies are communicated to the recipient in strict confidence and may not be retransmitted, published, reproduced, copied or used in any manner, including as the basis for the manufacture or sale of any products, without the express prior written consent of Tornatech Inc.