TORNATECH

Project: _____

Customer: _____

Engineer: _____

Pump Manufacturer: _____

Technical Data
Submittal Document

GPx+GPU Series

Full Service
Electric Fire Pump Controller
with Automatic Power Transfer Switch

Contents:

Data Sheets
Dimensional Data
Wiring Schematics
Field Connections

Note: The drawings included in this package are for controllers covered under our standard offering. Actual AS BUILT drawings may differ from what is shown in this package.

c UL us FM APPROVED N.Y.C. APPROVED CE

August 2026

Select starting method

☐ Model GPA+GPU
Across the line

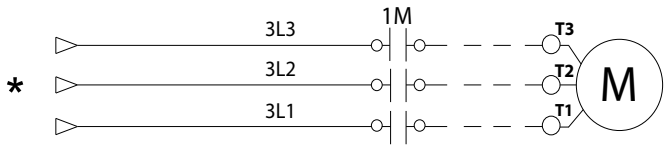

☐ Model GPP+GPU
Partwinding

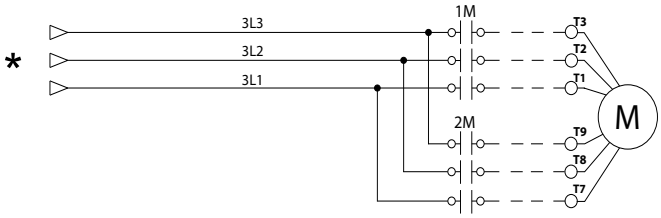

☐ Model GPS+GPU
Soft Start Soft Stop

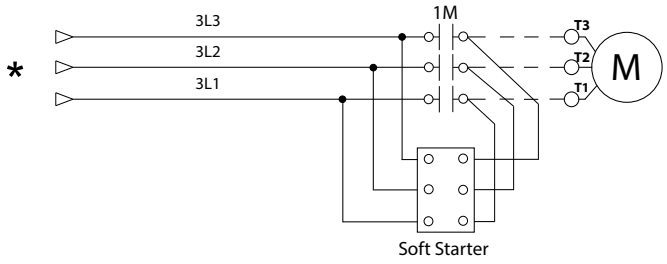

☐ Model GPR+GPU
Autotransformer

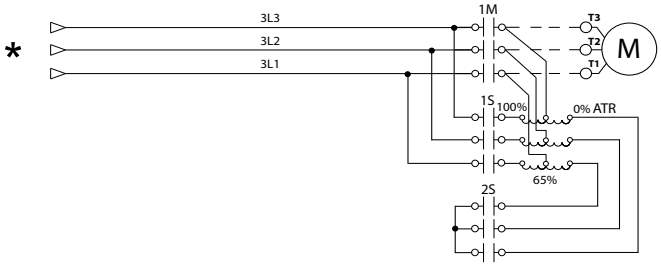

☐ Model GPY+GPU
Wye-Delta Open

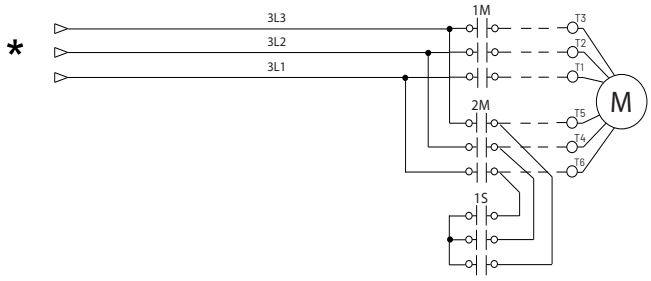

☐ Model GPW+GPU
Wye-Delta Closed

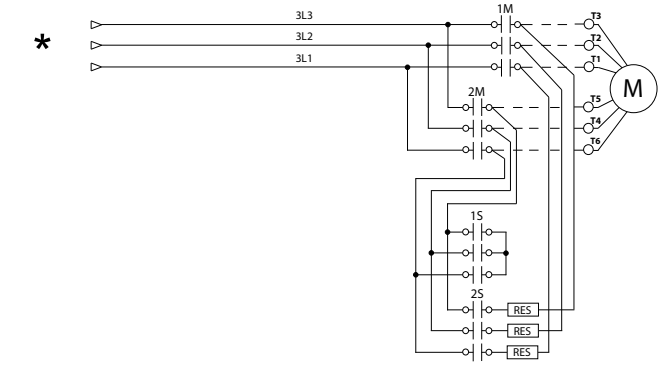

*From Automatic Power Transfer Switch
*Please see Disconnecting Means details on page 4

This is a Marketing document. Please consult factory for more information.
Manufacturer reserves the right to modify this information without notice

Select voltage and power rating

Voltage	Select Voltage	HP	Select HP
200V/3ph/50-60Hz [2]	☐	5	☐
208V/3ph/50-60Hz [2]	☐	7.5	☐
220V/3ph/50-60Hz [3]	☐	10	☐
230V/3ph/50-60Hz [3]	☐	15	☐
240V/3ph/50-60Hz [3]	☐	20	☐
380V/3ph/50-60Hz [4]	☐	25	☐
400V/3ph/50-60Hz [4]	☐	30	☐
415V/3ph/50-60Hz [4]	☐	40	☐
440V/3ph/50-60Hz [5]	☐	50	☐
460V/3ph/50-60Hz [5]	☐	60	☐
480V/3ph/50-60Hz [5]	☐	75	☐
600V/3ph/60Hz [5]	☐	100	☐
		125	☐
		150	☐
		200	☐
		250	☐
		300	☐
		350	☐
		400	☐
		450	☐
		500	☐

Voltage	Select Voltage	kW [1]	Select kW
380V/3ph/50-60Hz	☐	4	☐
400V/3ph/50-60Hz	☐	5.5	☐
415V/3ph/50-60Hz	☐	7.5	☐
		11	☐
		15	☐
		18.5	☐
		22	☐
		30	☐
		37	☐
		45	☐
		55	☐
		75	☐
		90	☐
		110	☐
		132	☐
		160	☐
		200	☐
		250	☐
		315	☐
		355	☐
		400	☐
		450	☐

Notes: [1] kW power ratings only available for Models GPA+GPU, GPS+GPU and GPY+GPU.
[2] Maximum power rating is 200HP.
[3] Maximum power rating is 250HP.
[4] Maximum power rating is 450HP.
[5] Maximum power rating is 500HP.

This is a Marketing document. Please consult factory for more information.
Manufacturer reserves the right to modify this information without notice

GPx+GPU Series Full Service Electric Fire Pump Controller with Automatic Power Transfer Switch

Standard, Listings, Approvals and Certifications	**Built to NFPA 20**		
	Underwriters Laboratory (UL)	• UL218 - Fire Pump Controllers	
	FM Global	Class 1321/1323	
	New York City	Accepted for use in the City of New York by the Department of Buildings	
	CE Mark	Various EN, IEC & CEE directives and standards	
	Built in Canada or U.A.E	Built in Europe	
	☐ CE Mark Option	Supplied as Standard	
Enclosure	**Protection Rating**		
	Built in Canada or U.A.E	Built in Europe	
	☐ Standard: NEMA 2	☐ Standard: IP55	
	Optional		
	☐ NEMA 12	☐ NEMA 4X-304 sst painted	☐ IP54
	☐ NEMA 3	☐ NEMA 4X-304 sst brushed finish	☐ IP55
	☐ NEMA 3R	☐ NEMA 4X-316 sst painted	☐ IP65
	☐ NEMA 4	☐ NEMA 4X-316 sst brushed finish	☐ IP66
	Accessories • Bottom entry gland plate • Lifting Lugs • Keylock handle	**Paint Specifications** • Red RAL3002 • Powder coating • Glossy textured finish	

Short Circuit Withstand Ratings

HP	200V to 208V 50/60Hz/3ph			220V to 240V 50/60Hz/3ph			380V to 415V 50/60Hz/3ph			440V to 480V 50/60Hz/3ph			575V to 600V 60Hz/3ph		
	Standard	Inter-mediate Option D13 ☐ F6 ☐	High Option D13B ☐ F6B ☐	Standard	Inter-mediate Option D13 ☐ F6 ☐	High Option D13B ☐ F6B ☐	Standard	Inter-mediate Option D13 ☐ F6 ☐	High Option D13B ☐ F6B ☐	Standard	Inter-mediate Option D13 ☐ F6 ☐	High Option D13B ☐ F6B ☐	Standard	Inter-mediate Option D13 ☐ F6 ☐	High Option D13B ☐ F6B ☐
≤150	100kA	150kA	200kA	100kA	150kA	200kA	100kA	150kA	200kA	100kA	150kA	200kA	50kA	100kA	-
200	50kA	100kA	-												
250	-	-	-	50kA	100kA	-									
300	-	-	-	-	-	-		100kA	-						
350	-	-	-	-	-	-			-						
400	-	-	-	-	-	-	50kA		-						
450	-	-	-	-	-	-	30kA		-	50kA	100kA	-			
500	-	-	-	-	-	-			-			-			

This is a Marketing document. Please consult factory for more information.
Manufacturer reserves the right to modify this information without notice

GPx+GPU Series Full Service Electric Fire Pump Controller with Automatic Power Transfer Switch

Ambient Temperature Rating	**Standard**: ☐ 4°C to 40°C / 39°F to 104°F **Optional**: ☐ 4°C to 55°C / 39°F to 131°F Controllers built in Dubai, UAE (Tornatech FZE) are supplied standard with 55°C rating.
Surge Suppression	Surge arrestor rated to suppress surges above line voltage
Disconnecting Means	• Isolating switch and circuit breaker assembly: - Door interlocked in the ON position - Isolating switch rated not less than 115% of motor full load current - Circuit breaker continuous rating not less than 115% of motor full load current - Overcurrent sensing non-thermal type, magnetic only - Instantaneous trip setting of not more than 20 times the motor full load current • Common flange mounted operating handle
Service Entrance Rating	Suitable as service entrance equipment (not applicable for installations in Canada).
Emergency Start Handle	• Flange mounted • Integrated limit switch • Pull and latch activation • Across the line start (direct on line)
Locked Rotor Protector	• Operate shunt trip to open circuit breaker • Trip between 8 and 20 seconds • Factory set at 600% of motor full load current
Electrical Readings	• Voltage phase to phase (normal power) • Amperage of each phase when motor is running
Pressure Readings	• Continuous system pressure display • Cut-in and Cut-out pressure settings
Pressure and Event recorder	• Pressure readings with date stamp • Event recording with date stamp • Under regular maintained operation, events are stored in memory for the life of the controller. • Data viewable on operator interface display screen • Downloadable by USB port to external memory device or wireless connection to manufacturers App (mobile device).
Pressure Sensing	• Pressure transducer and run test solenoid valve assembly for fresh water application • Pressure sensing line connection 1/2” Female NPT • Drain connection 3/8” • Rated for 0-500PSI working pressure (standard display at 0-300PSI) • Externally mounted with protective cover

This is a Marketing document. Please consult factory for more information.
Manufacturer reserves the right to modify this information without notice

Audible Alarm	Alarm buzzer - 85dB at 3 meters
Visual Indications	• Power available • Motor run • Periodic test • Manual start • Deluge valve start • Remote automatic start • Remote manual start • Emergency start • Pump on demand/Automatic start • Pump room temperature (ºF or ºC) • Lockout
Visual & Audible Alarms	Visual only • Alternate lock rotor current • Alternate power phase reversal • Automatic transfer switch trouble • Control voltage not healthy • Invalid cut-in • Lock rotor current • Loss of power • Low ambient temperature • Low water level • Motor trouble • Normal power phase reversal • Overcurrent • Overvoltage • Phase loss L1 • Phase loss L2 • Phase loss L3 • Phase unbalanced • Pressure transducer fault detected • Pump on demand • Pump room alarm • Service required • Undercurrent • Undervoltage • Check weekly test solenoid • Weekly test cut-in reached Visual and Audible • ACB in OFF or tripped • Alternate IS tripped/open • Fail to start
Remote Alarm Contacts	DPDT-8A-250V.AC • Power available • Phase reversal • Motor run • Common pump room alarm (field re-assignable)** • Overvoltage • Undervoltage • Phase unbalance • Low pump room temperature • High Pump room temperature • Common motor trouble (field re-assignable)** • Overcurrent • Fail to start • Undercurrent • Ground fault • Free (field programmable)**

**Tornatech reserves the right to use any of these three alarm points for special specific application requirements.

ViZiTouch V2.1 Operator Interface	• Embedded microcomputer with software PLC logic • 7.0” color touch screen (HMI technology) • Upgradable software • Multi-language		
Communication Protocol Capability	• Protocol: Modbus • Connection type: Shielded female connector RJ45 • Frame Format: TCP/IP • Addresses: See bulletin MOD-GPx		
Operation	**Automatic Start**	• Start on pressure drop • Remote start signal from automatic device • Deluge valve start	
	Manual Start	• Start pushbutton • Run test pushbutton • Remote start from manual device	
	Stopping	• Manual with Stop pushbutton • Automatic after expiration of minimum run timer ***	
	Timers	Field Adjustable & Visual Countdown	• Minimum run timer ***(off delay) • Sequential start timer (on delay) • Periodic test timer
	Actuation	Visual Indication	• Pressure • Non-pressure
	Mode		• Automatic • Non-automatic

***Can only be used if approved by the AHJ

This is a Marketing document. Please consult factory for more information.
Manufacturer reserves the right to modify this information without notice

Automatic Power Transfer Switch	**Surge Suppression**	Surge arrestor rated to suppress surges above line voltage
	Disconnecting Means	• Isolating switch and circuit breaker assembly: - Door interlocked in the ON position - Isolating switch rated not less than 115% of motor full load current - Circuit breaker continuous rating not less than 115% of motor full load current - Overcurrent sensing non-thermal type, magnetic only - Instantaneous trip setting of not more than 20 times the motor full load current • Common flange mounted operating handle
	Locked Rotor Protector	• Operate shunt trip to open circuit breaker • Factory set at 600% of motor full load current • Trip between 8 and 20 seconds
	Visual Indications	• Alternate (emergency) isolating switch in the OFF position • Alternate (emergency) voltage phase to phase • Transfer switch in normal position • Transition timers
	Visual Alarms	• Transfer switch trouble • Alternate power phase reversal • Alternate isolating switch open/tripped • Alternate circuit breaker open/tripped • Alternate side locked rotor current
	Transfer switch test pushbutton	
	Bypass for re-transfer and generator shutdown	
	Electrically operated and mechanically held in the normal or alternate position	
	Provision for manual operation	
	Remote Alarm Contacts SPDT-8A-250VAC • Isolating switch in the OFF position • Transfer switch in normal position • Transfer switch in alternate (emergency) position	
	Time Delays • Momentary normal power outage override (factory set at 3 sec - field adjustable 1 to 3 sec) • Alternate (emergency) power available delay (factory set at 3 sec - field adjustable 1 to 3 sec) • Transfer trouble delay (factory set at 20 sec - field adjustable 1 to 60 sec) • Retransfer to normal (factory set at 5 min - field adjustable 1 to 20 min) • Generator cooldown (factory set at 5 min - field adjustable 1 to 20 min)	
	Voltage Sensing • Transfer to alternate (normal power dropout) 85% of nominal - field adjustable 0 to 100% • Phase reversal transfer to alternate • Retransfer to normal (normal power pickup) 90% of nominal - field adjustable 0 to 100%	
	Audible Alarm (AIS Open) Alarm buzzer - 85dB at 3 meters	
	Generator Start Connection SPDT-8A-250V.AC	

☐	A4	Flow switch provision
☐	A8	Foam pump application w/o pressure transducer and run test solenoid valve.
☐	A9	Low zone pump control function
☐	A10	Middle zone pump control function
☐	A11	High zone pump control function
☐	A13	Non-pressure actuated controller w/o pressure transducer and run test solenoid valve
☐	A16	Lockout/interlock circuit from equipment installed inside the pump room
☐	B11	Built in alarm panel (120V.AC supervisory power) providing indication for: • Audible alarm & silence pushbutton for motor run, phase reversal, loss of phase. • Pilot lights for loss of phase & supervisory power available
☐	B11B	Built in alarm panel same as B11 but 220-240VAC supervisory power
☐	B19A	High motor temperature c/w thermoster relay and alarm contacts (DPDT)
☐	B19B	High motor temperature c/w PT100 relay and alarm contacts (DPDT)
☐	B21	Ground fault alarm detection c/w visual indication and alarm contact (DPDT)
☐	B25	Digital flow test feature complete with access to Pump Curve menu, display of flow rate on main screen and 25ft cable (Option ONLY suitable for connection with Tornatech digital flow meter)
☐	C1	Extra motor run alarm contact (DPDT)
☐	C4	Periodic test alarm contact (DPDT)
☐	C6	Low discharge pressure alarm contact (DPDT)
☐	C7	Low pump room temperature alarm contact (DPDT)
☐	C10	Low water reservoir level alarm contact (DPDT)
☐	C11	High electric motor temperature alarm contact (DPDT)
☐	C12	High electric motor vibration c/w visual indication and alarm contact (DPDT)
☐	C14	Pump on demand / automatic start alarm contact (DPDT)
☐	C15	Pump fail to start alarm contact (DPDT)
☐	C16	Control voltage healthy alarm contact (DPDT)

☐	C17	Flow meter valve loop open c/w visual indication and alarm contact (DPDT)
☐	C18	High water reservoir level c/w visual indication and alarm contact (DPDT)
☐	C19	Emergency start alarm contact (DPDT)
☐	C20	Manual start alarm contact (DPDT)
☐	C21	Deluge valve start alarm contact (DPDT)
☐	C22	Remote automatic start alarm contact (DPDT)
☐	C23	Remote manual start alarm contact (DPDT)
☐	C24	High pump room temperature alarm contact (DPDT)
☐	C25	Second set of standard alarm contacts (DPDT) (Typical for city of Los Angeles and Denver)
☐	Cx	Additional visual and alarm contact (Specify function) (DPDT)
☐	D1	Low suction pressure transducer for fresh water rated at 0-500PSI with visual indication and alarm contact
☐	D1A	Low suction pressure transducer for sea water rated at 0-500PSI with visual indication and alarm contact
☐	D5	Pressure transducer and run test solenoid valve for fresh water rated for 0-500PSI (for factory calibration purposes only)
☐	D5D	Pressure transducer and run test solenoid valve for sea water rated for 0-500PSI
☐	D10	Omit mounting feet (when applicable)
☐	D14	Anti-condensation heater & thermostat
☐	D14A	Anti-condensation heater & humidistat
☐	D14B	Anti-condensation heater & thermostat & humidistat
☐	D15	Tropicalization
☐	D18	CE Mark with factory certificate
☐	D27	Motor heater connection (external single phase power source and heater on/off contact)
☐	D27A	Motor heater connection (internal single phase power source and heater on/off contact)
☐	D28	Customized drawing set

Note: Options chosen from this page are not electrically represented on the wiring schematics in this submittal package.

☐ D34A	Field programmable I/O board - 5 Input / 5 output
☐ D36	Redundant pressure transducer for fresh water rated for 0-500PSI
☐ D36A	Redundant pressure transducer for sea water rated for 0-500PSI
☐ D43	Seismic Certification compliant to CBC 2019, IBC 2018 rigid base/wall mounted only
☐ D44	Special Seismic Certification compliant to OSHPD rigid base/wall mounted only
☐ E1	Permanent load shedding contacts
☐ E2	Temporary pump motor start period load shedding contacts
☐ E3	Temporary & permanent load shedding contacts
☐ F2	Anti condensation heater & thermostat (alternate power section)
☐ F2A	Anti condensation heater & humidistat (alternate power section)
☐ F2B	Anti condensation heater & thermostat & humidistat (alternate power section)

☐ L01	Other language and English (bilingual)
☐ L02	French
☐ L03	Spanish
☐ L04	German
☐ L05	Italian
☐ L06	Polish
☐ L07	Romanian
☐ L08	Hungarian
☐ L09	Slovakian
☐ L10	Croatian
☐ L11	Czech
☐ L12	Portuguese
☐ L13	Dutch
☐ L15	Turkish
☐ L16	Swedish
☐ L21	Danish
☐ L25	Chinese
☐ L28	Finnish
☐ L29	Norwegian

Additional Options:

☐ _____

☐ _____

☐ _____

☐ _____

☐ _____

Note: Options chosen from this page are not electrically represented on the wiring schematics in this submittal package.

ViZiTouch V2.1 Operator Interface

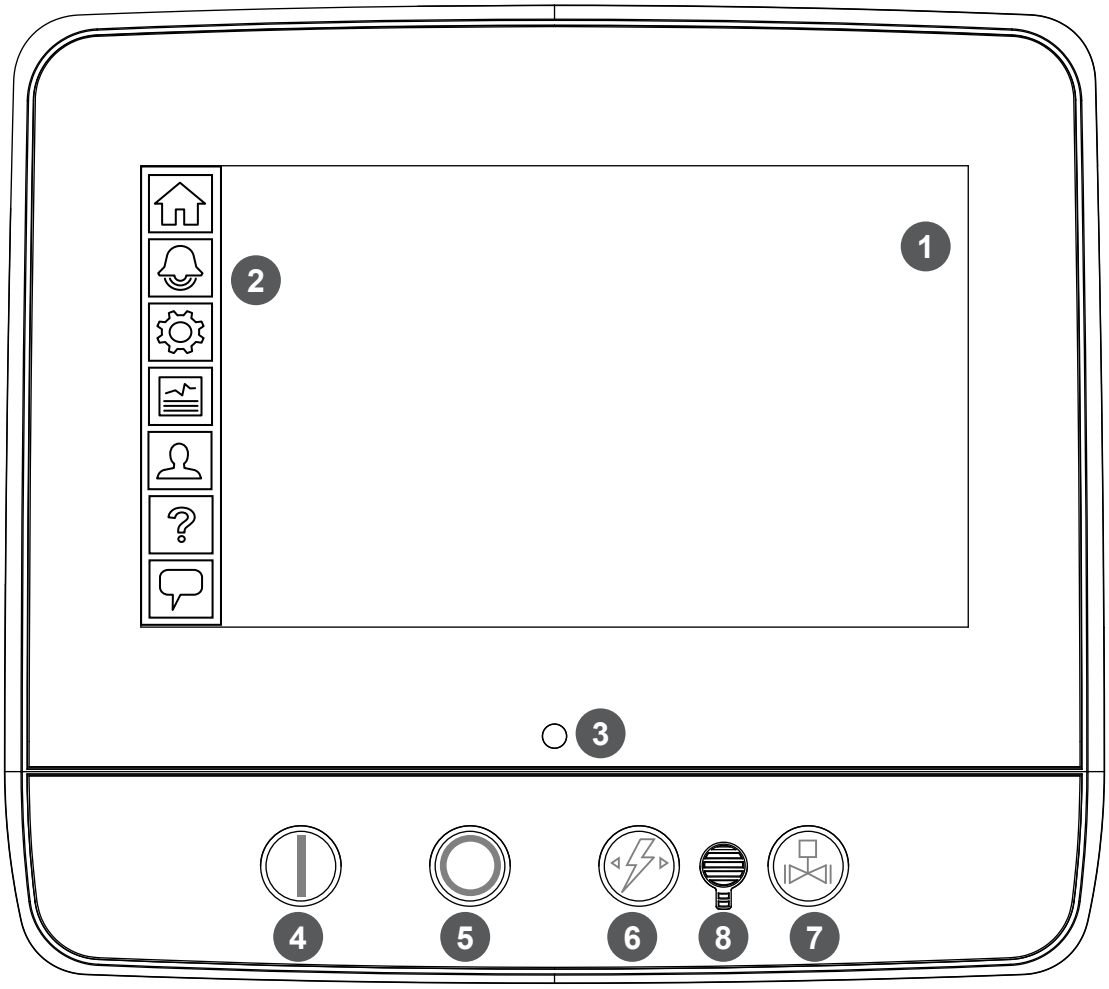

1 - Color touch screen
2 - Onscreen menu
- HOME page
- ALARM page
- CONFIGURATION page
- HISTORY page
- SERVICE page
- MANUAL page
- LANGUAGES page

3 - Power LED (3 colors)
4 - START button
5 - STOP button
6 - TRANSFER SWITCH TEST button
7 - RUN TEST button
8 - Alarm buzzer

This is a Marketing document. Please consult factory for more information.
Manufacturer reserves the right to modify this information without notice

TORNATECH

© Tornatech, Inc. Not for construction.
Subject to change without notice.

	BY	DD/MM/YY
DRAWN BY	MLC	04/10/24
FINAL APPROVAL	FC	07/11/24

ELECTRIC FIRE PUMP CONTROLLER WITH AUTOMATIC TRANSFER SWITCH

MODEL: GPR/GPS/GPW +GPU

BUILT TO THE LATEST EDITION OF THE NFPA20 & NFPA70

NYC Dpt of Building Approved

THIRD ANGLE PROJECTION

DRAWING NUMBER GPX-DI923/E
DWG REV. 0
SHEET 1 OF 1

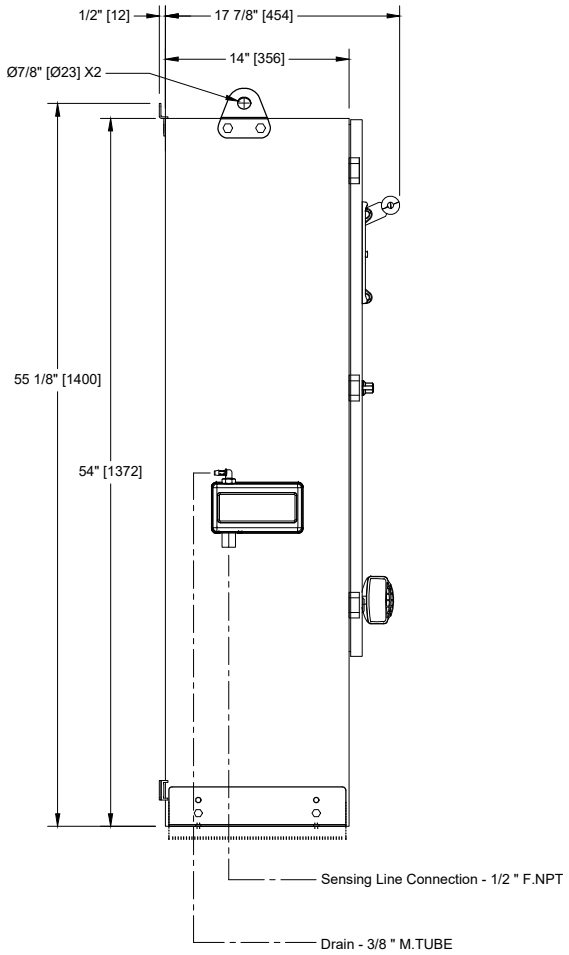

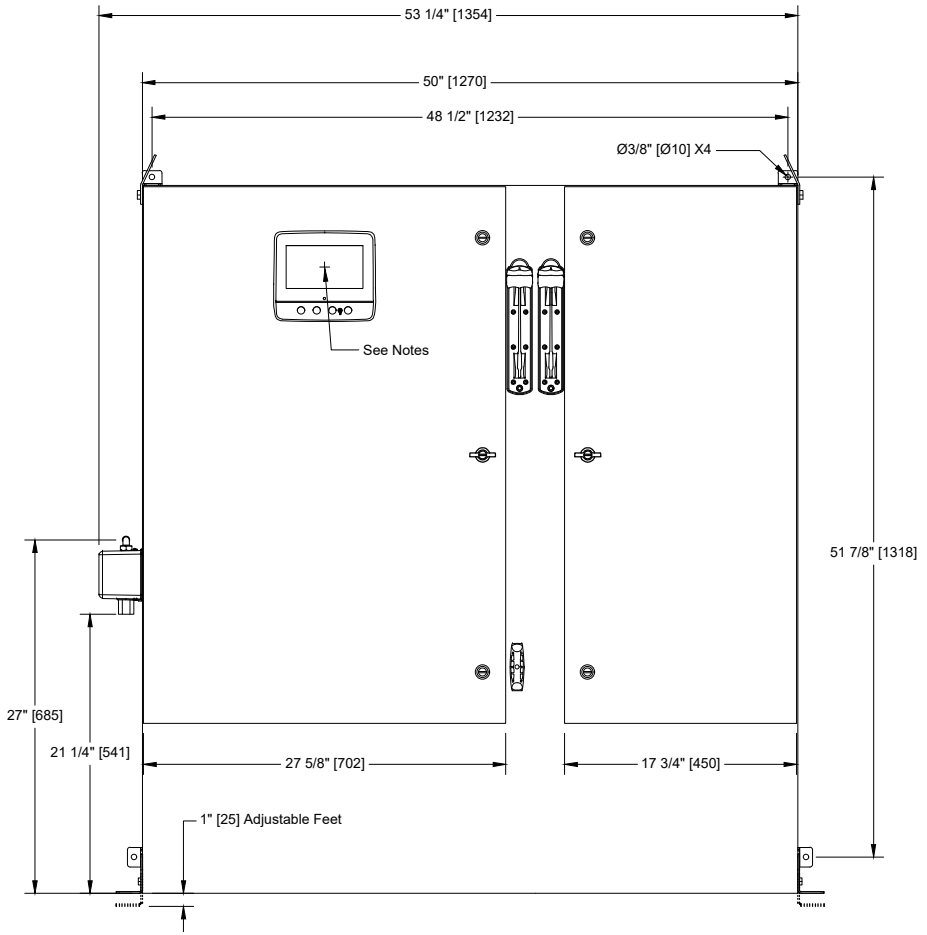

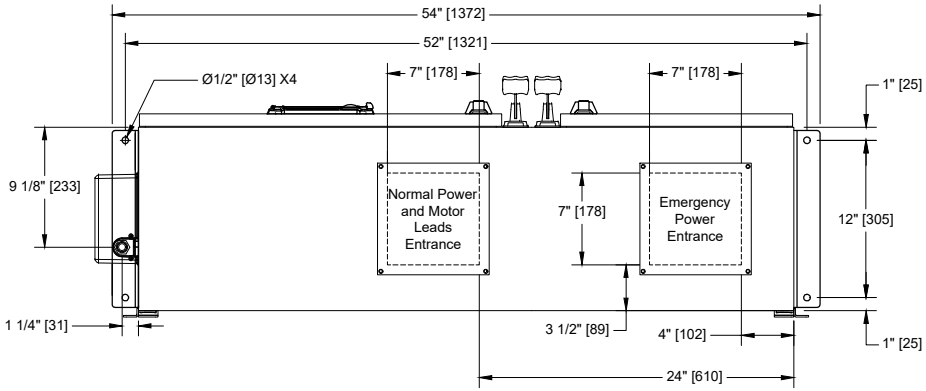

Voltage / Power Table		
Voltage	Min HP	Max HP
208	40	60
220 - 240	40	75
380 - 400 - 415	75	125
440 - 480	75	150
600	100	150

Notes:

- Standard NEMA: NEMA 2
- Standard paint : textured red RAL 3002.
- All dimensions are in inches [millimeters].
- Center of screen: 47-5/8" [1208] from bottom.
- Bottom conduit entrance through removable gland plate recommended.
- Use watertight conduit and connector only.
- Protect equipment against drilling chips.
- Door swing equal to door width.

Copyright © 2026 Tornatech Inc. All right reserved. This drawing and the information contained or depicted herein are the sole property of Tornatech Inc. Copies are communicated to the recipient in strict confidence and may not be retransmitted, published, reproduced, copied or used in any manner, including as the basis for the manufacture or sale of any products, without the express prior written consent of Tornatech Inc.

TORNATECH

© Tornatech, Inc. Not for construction. Subject to change without notice.

	BY	DD/MM/YY
DRAWN BY	MLC	17/12/24
FINAL APPROVAL	FC	17/12/24

ELECTRIC FIRE PUMP CONTROLLER REDUCED VOLTAGE / WYE-DELTA (CLOSED TRANSITION) WITH AUTOMATIC TRANSFER SWITCH

MODEL: GPW+GPU

BUILT TO THE LATEST EDITION OF THE NFPA20 & NFPA70

NYC Dpt of Building Approved

DRAWING NUMBER GPW-WS810/E

DWG REV. 3

SHEET 1 OF 2

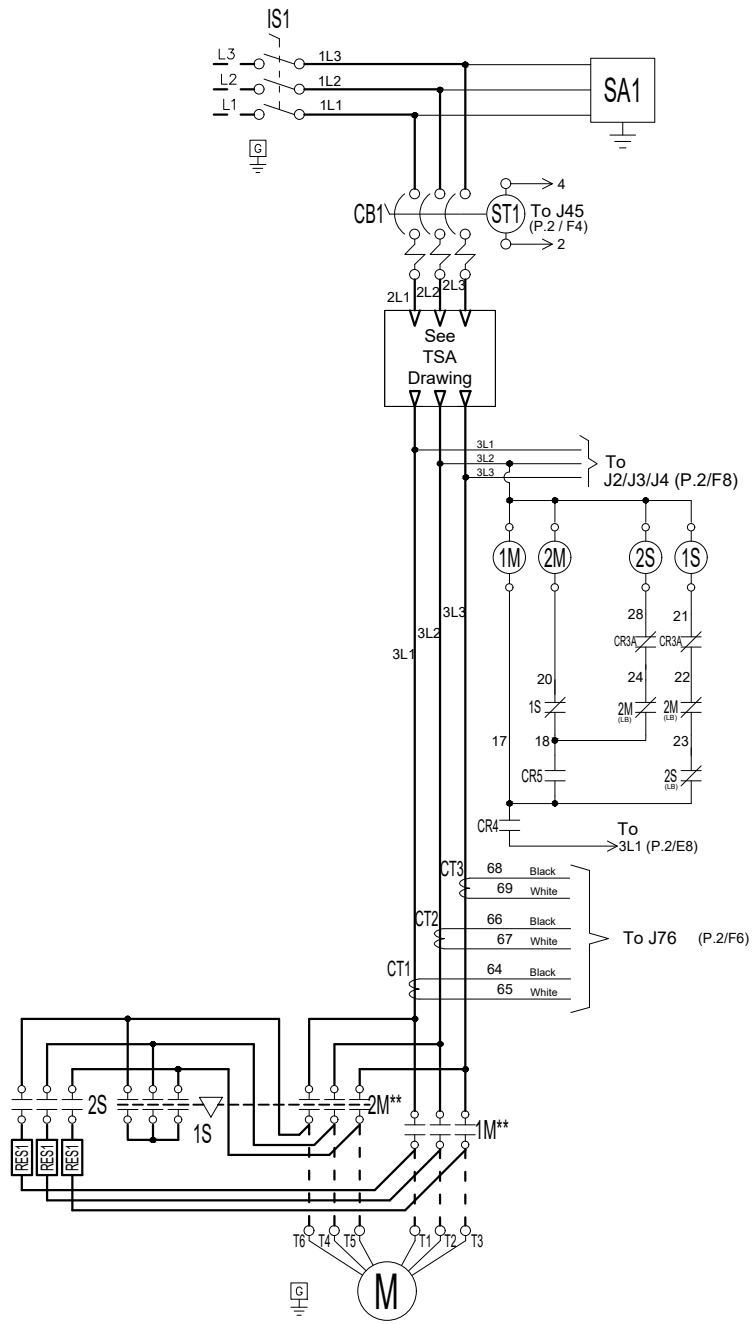

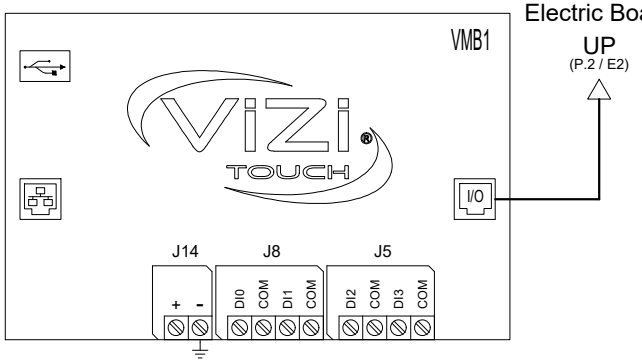

To I/O Electric Board UP (P.2 / E2)

Legend	
1M-2M	Contactors
1S-2S	Contactors
AB	Alarm Bell
CB	Circuit Breaker
CR	Control Relay
CT	Current Transformer
EB	Electric I/O Board
IS	Isolating Switch
J	Jumper
LS	Limit Switch
PT	Pressure Transducer
RES	Primary Resistor
SA	Surge Arrester
ST	Shunt Trip
SV	Solenoid Valve
VMB	Main Board
XTR	Transformer

Copyright © 2026 Tornatech Inc. All right reserved. This drawing and the information contained or depicted herein are the sole property of Tornatech Inc. Copies are communicated to the recipient in strict confidence and may not be retransmitted, published, reproduced, copied or used in any manner, including as the basis for the manufacture or sale of any products, without the express prior written consent of Tornatech Inc.

TORNATECH

© Tornatech, Inc. Not for construction.
Subject to change without notice.

	BY	DD/MM/YY
DRAWN BY	MLC	17/12/24
FINAL APPROVAL	FC	17/12/24

ELECTRIC FIRE PUMP CONTROLLER
REDUCED VOLTAGE / WYE-DELTA
(CLOSED TRANSITION)
WITH AUTOMATIC TRANSFER SWITCH

MODEL: GPW+GPU

BUILT TO THE LATEST EDITION OF THE NFPA20 & NFPA70

NYC Dpt of Building Approved

DRAWING NUMBER GPW-WS810/E
DWG REV. 3
SHEET 2 OF 2

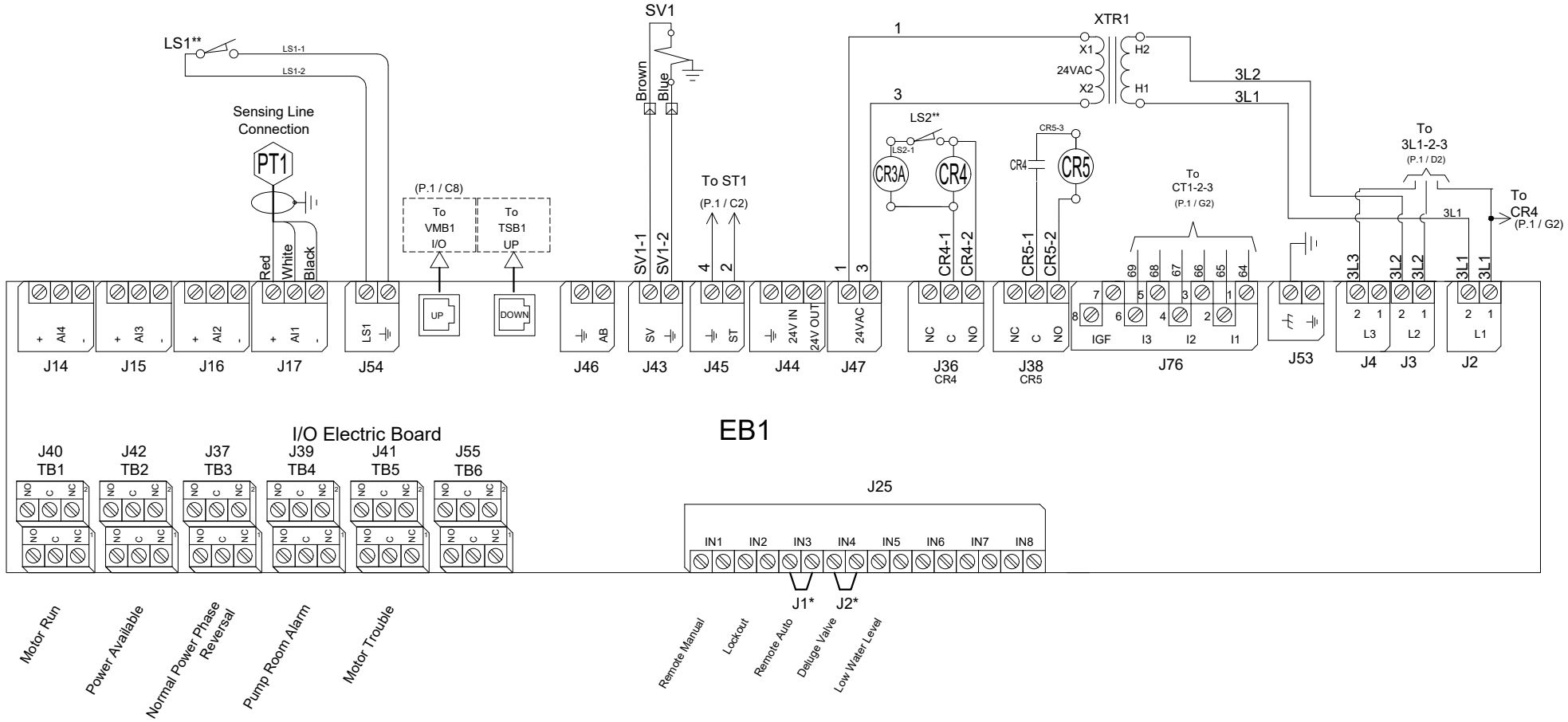

* Remove jumper to use this feature
** Contact closes when emergency start is in "ON" position

Copyright © 2026 Tornatech Inc. All right reserved. This drawing and the information contained or depicted herein are the sole property of Tornatech Inc. Copies are communicated to the recipient in strict confidence and may not be retransmitted, published, reproduced, copied or used in any manner, including as the basis for the manufacture or sale of any products, without the express prior written consent of Tornatech Inc.

TORNATECH

© Tornatech, Inc. Not for construction. Subject to change without notice.

	BY	DD/MM/YY
DRAWN BY	MLC	11/12/24
FINAL APPROVAL	FC	11/12/24

AUTOMATIC TRANSFER SWITCH FOR ELECTRIC FIRE PUMP CONTROLLER

MODEL: GPU

BUILT TO THE LATEST EDITION OF THE NFPA20 & NFPA70

c UL us · FM APPROVED · NYC Dpt of Building Approved

DRAWING NUMBER: GPU-WS800/E

DWG REV. 1

SHEET 1 OF 1

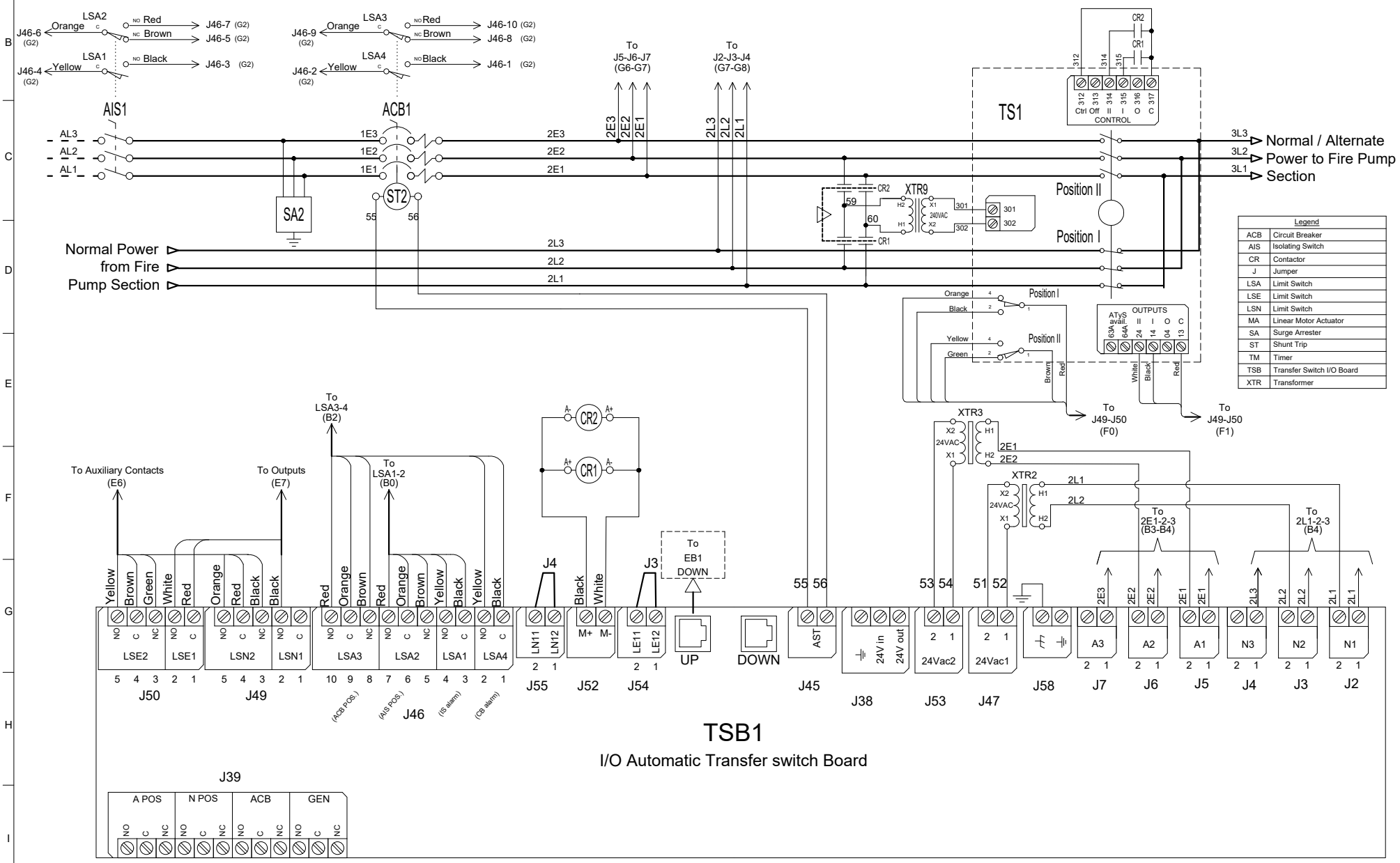

Legend	
ACB	Circuit Breaker
AIS	Isolating Switch
CR	Contactor
J	Jumper
LSA	Limit Switch
LSE	Limit Switch
LSN	Limit Switch
MA	Linear Motor Actuator
SA	Surge Arrester
ST	Shunt Trip
TM	Timer
TSB	Transfer Switch I/O Board
XTR	Transformer

Copyright © 2026 Tornatech Inc. All right reserved. This drawing and the information contained or depicted herein are the sole property of Tornatech Inc. Copies are communicated to the recipient in strict confidence and may not be retransmitted, published, reproduced, copied or used in any manner, including as the basis for the manufacture or sale of any products, without the express prior written consent of Tornatech Inc.

© Tornatech, Inc. Not for construction.
Subject to change without notice.

		BY	DD/MM/YY
DRAWN BY		MLC	04/10/24
FINAL APPROVAL		FC	07/11/24

ELECTRIC FIRE PUMP CONTROLLER

MODEL:GPX

BUILT TO THE LATEST EDITION OF THE NFPA20 & NFPA70

NYC Dpt of Building Approved

DRAWING NUMBER GPX-TD907/E
DWG REV. 0
SHEET 1 OF 1

COPPER CONDUCTORS for Isolating Switch (IS1).
Field Wiring According to Bending Space (AWG or MCM). Terminals L1 - L2 - L3

Bending Space	5 " (127 mm)							8 " (203 mm)		
HP / Voltage	5	7.5	10	15	20	25	30	40	50	60
208	1x (10 to 1/0)	1x (8 to 1/0)	1x (8 to 1/0)	1x (6 to 1/0)	1x (4 to 1/0)	1x (3 to 1/0)	1x (2 to 1/0)	1x (1/0 to 3/0)	1x (3/0 to 250)	1x (4/0 to 250)
220 to 240	1x (10 to 1/0)	1x (10 to 1/0)	1x (8 to 1/0)	1x (6 to 1/0)	1x (4 to 1/0)	1x (4 to 1/0)	1x (3 to 1/0)	1x (1 to 3/0)	1x (2/0 to 3/0)	1x (3/0 to 250)
380 to 416	1x (10 to 1/0)	1x (10 to 1/0)	1x (10 to 1/0)	1x (8 to 1/0)	1x (8 to 1/0)	1x (6 to 1/0)	1x (6 to 1/0)	1x (4 to 1/0)	1x (3 to 1/0)	1x (1 to 1/0)
440 to 480	1x (10 to 1/0)	1x (10 to 1/0)	1x (10 to 1/0)	1x (10 to 1/0)	1x (8 to 1/0)	1x (8 to 1/0)	1x (6 to 1/0)	1x (6 to 1/0)	1x (4 to 1/0)	1x (3 to 1/0)
600	1x (10 to 1/0)	1x (10 to 1/0)	1x (10 to 1/0)	1x (10 to 1/0)	1x (10 to 1/0)	1x (8 to 1/0)	1x (8 to 1/0)	1x (6 to 1/0)	1x (6 to 1/0)	1x (4 to 1/0)

Bending Space	12 " (305 mm)				16 " (406 mm)***						
HP / Voltage	75	100	125	150	200	250	300	350	400	450	500
208	2x (1/0 to 500)	2x (2/0 to 500)	2x (4/0 to 500)	2x (250 to 500)	3x (4/0 to 500)	--------	--------	--------	--------	--------	--------
220 to 240	1x (250)	2x (2/0 to 500)	2x (3/0 to 500)	2x (4/0 to 500)	2x (350 to 500)	3x (250 to 500)	--------	--------	--------	--------	--------
380 to 416	1x (1/0 to 250)	1x (3/0 to 250)	1x (250)	1x (300 to 500)	1x (500)	2x (4/0 to 500)	2x (300 to 500)	3x (4/0 to 500)	3x (250 to 500)	4x (3/0 to 500)	--------
440 to 480	1x (1 to 250)	1x (2/0 to 250)	1x (3/0 to 250)	1x (4/0 to 250)	1x (350 to 500)	1x (500)	2x (4/0 to 500)	2x (300 to 500)	3x (3/0 to 500)	3x (4/0 to 500)	3x (250 to 500)
600	1x (3 to 1/0)	1x (1 to 250)	1x (2/0 to 250)	1x (3/0 to 250)	1x (250 to 500)	1x (350 to 500)	1x (500)	2x (4/0 to 500)	2x (250 to 500)	2x (300 to 500)	2x (350 to 500)
Bending Space	5 " (127 mm)	8 " (203 mm)			12 " (305 mm)						

ALUMINUM CONDUCTORS for Isolating Switch (IS1).***
Field Wiring According to Bending Space (AWG or MCM). Terminals L1 - L2 - L3

Bending Space	5 " (127 mm)							8 " (203 mm)		10 " (254 mm)
HP / Voltage	5	7.5	10	15	20	25	30	40	50	60
208	1x (10 to 1/0)	1x (6 to 1/0)	1x (6 to 1/0)	1x (4 to 1/0)	1x (3 to 1/0)	1x (1 to 1/0)	1x (1/0)	1x (3/0)	1x (4/0 to 250)	1x (300) ** or 1x (250) 90°C *
220 to 240	1x (10 to 1/0)	1x (8 to 1/0)	1x (6 to 1/0)	1x (4 to 1/0)	1x (3 to 1/0)	1x (2 to 1/0)	1x (1 to 1/0)	1x (2/0 to 3/0)	1x (3/0) 90°C *	1x (250)
380 to 416	1x (10 to 1/0)	1x (10 to 1/0)	1x (10 to 1/0)	1x (6 to 1/0)	1x (6 to 1/0)	1x (4 to 1/0)	1x (4 to 1/0)	1x (2 to 1/0)	1x (1 to 1/0)	1x (1/0)
440 to 480	1x (10 to 1/0)	1x (10 to 1/0)	1x (10 to 1/0)	1x (8 to 1/0)	1x (6 to 1/0)	1x (6 to 1/0)	1x (6 to 1/0)	1x (4 to 1/0)	1x (2 to 1/0)	1x (1 to 1/0)
600	1x (10 to 1/0)	1x (10 to 1/0)	1x (10 to 1/0)	1x (10 to 1/0)	1x (8 to 1/0)	1x (6 to 1/0)	1x (6 to 1/0)	1x (4 to 1/0)	1x (4 to 1/0)	1x (2 to 1/0)

Bending Space	12 " (305 mm)				16 " (406 mm)***						
HP / Voltage	75	100	125	150	200	250	300	350	400	450	500
208	2x (2/0 to 500)	2x (4/0 to 500)	2x (300 to 500)	2x (350 to 500)	3x (300 to 500)	--------	--------	--------	--------	--------	--------
220 to 240	1x (350) ** N/A	2x (3/0 to 500)	2x (250 to 500)	2x (300 to 500)	2x (500)	3x (400 to 500)	--------	--------	--------	--------	--------
380 to 416	1x (3/0 to 250)	1x (250)	Consult Factory	1x (500)	Consult Factory	2x (300 to 500)	2x (500)	3x (300 to 500)	3x (350 to 500)	3x (400 to 500)	--------
440 to 480	1x (1/0 to 250)	1x (3/0 to 250)	1x (250)	1x (250) 90°C *	1x (500)	Consult Factory	2x (300 to 500)	2x (400 to 500)	3x (250 to 500)	3x (300 to 500)	3x (350 to 500)
600	1x (1 to 1/0)	1x (2/0 to 250)	1x (4/0 to 250)	1x (4/0 to 250)	1x (350 to 500)	1x (500)	Consult Factory	2x (300 to 500)	2x (350 to 500)	2x (400 to 500)	2x (500)
Bending Space	5 " (127 mm)	8 " (203 mm)			12 " (305 mm)						

*For standard enclosure, use 90°C aluminium wire. Consult Factory for Use of Conductors Rated Lower than 90°C.
** Consult Factory
*** Aluminum is not permitted in Canada.

Power Terminals

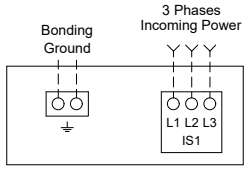

***Only for 16"(406 mm) bending space

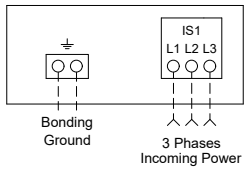

Notes:
1 - For proper wire sizing, refer to NFPA70 and NEC (USA) or CEC (Canada) or local code.
2 - Controller suitable for use as service equipment in USA.
3 - Controller use as service equipment prohibited in Canada.
4 - For more accurate motor connections refer to motor manufacturer or motor nameplate.
5 - Controller is phase sensitive. Incoming lines must be connected in ABC sequence.

Drawing for information only.
Manufacturer reserves the right to modify this drawing without notice.
Contact manufacturer for "As Built" drawing.

Copyright © 2026 Tornatech Inc. All right reserved. This drawing and the information contained or depicted herein are the sole property of Tornatech Inc. Copies are communicated to the recipient in strict confidence and may not be retransmitted, published, reproduced, copied or used in any manner, including as the basis for the manufacture or sale of any products, without the express prior written consent of Tornatech Inc.

TORNATECH

© Tornatech, Inc. Not for construction. Subject to change without notice.

		BY	DD/MM/YY
DRAWN BY		MLC	04/10/24
FINAL APPROVAL		FC	07/11/24

AUTOMATIC TRANSFER SWITCH FOR ELECTRIC FIRE PUMP CONTROLLER

MODEL: GPU

BUILT TO THE LATEST EDITION OF THE NFPA20 & NFPA70

NYC Dpt of Building Approved

DRAWING NUMBER GPU-TD900/E

DWG REV. 0

SHEET 1 OF 1

COPPER CONDUCTORS for Isolating Switch (AIS1).
Field Wiring According to Bending Space (AWG or MCM). Terminals AL1 - AL2 - AL3

Bending Space	5 " (127 mm)							8 " (203 mm)		
HP / Voltage	5	7.5	10	15	20	25	30	40	50	60
208	1x (10 to 1/0)	1x (8 to 1/0)	1x (8 to 1/0)	1x (6 to 1/0)	1x (4 to 1/0)	1x (3 to 1/0)	1x (2 to 1/0)	1x (1/0 to 3/0)	1x (3/0 to 250)	1x (4/0 to 250)
220 to 240	1x (10 to 1/0)	1x (10 to 1/0)	1x (8 to 1/0)	1x (6 to 1/0)	1x (4 to 1/0)	1x (4 to 1/0)	1x (3 to 1/0)	1x (1 to 3/0)	1x (2/0 to 3/0)	1x (3/0 to 250)
380 to 416	1x (10 to 1/0)	1x (10 to 1/0)	1x (10 to 1/0)	1x (8 to 1/0)	1x (8 to 1/0)	1x (6 to 1/0)	1x (6 to 1/0)	1x (4 to 1/0)	1x (3 to 1/0)	1x (1 to 1/0)
440 to 480	1x (10 to 1/0)	1x (10 to 1/0)	1x (10 to 1/0)	1x (10 to 1/0)	1x (8 to 1/0)	1x (8 to 1/0)	1x (6 to 1/0)	1x (6 to 1/0)	1x (4 to 1/0)	1x (3 to 1/0)
600	1x (10 to 1/0)	1x (10 to 1/0)	1x (10 to 1/0)	1x (10 to 1/0)	1x (10 to 1/0)	1x (8 to 1/0)	1x (8 to 1/0)	1x (6 to 1/0)	1x (6 to 1/0)	1x (4 to 1/0)

Bending Space	12 " (305 mm)				16 " (406 mm)***						
HP / Voltage	75	100	125	150	200	250	300	350	400	450	500
208	2x (1/0 to 500)	2x (2/0 to 500)	2x (4/0 to 500)	2x (250 to 500)	3x (4/0 to 500)	--------	--------	--------	--------	--------	--------
220 to 240	1x (250)	2x (2/0 to 500)	2x (3/0 to 500)	2x (4/0 to 500)	2x (350 to 500)	3x (250 to 500)	--------	--------	--------	--------	--------
380 to 416	1x (1/0 to 250)	1x (3/0 to 250)	1x (250)	1x (300 to 500)	1x (500)	2x (4/0 to 500)	2x (300 to 500)	3x (4/0 to 500)	3x (250 to 500)	4x (3/0 to 500)	--------
440 to 480	1x (1 to 250)	1x (2/0 to 250)	1x (3/0 to 250)	1x (4/0 to 250)	1x (350 to 500)	1x (500)	2x (4/0 to 500)	2x (300 to 500)	3x (3/0 to 500)	3x (4/0 to 500)	3x (250 to 500)
600	1x (3 to 1/0)	1x (1 to 250)	1x (2/0 to 250)	1x (3/0 to 250)	1x (250 to 500)	1x (350 to 500)	1x (500)	2x (4/0 to 500)	2x (250 to 500)	2x (300 to 500)	2x (350 to 500)
Bending Space	5 " (127 mm)	8 " (203 mm)			12 " (305 mm)						

ALUMINUM CONDUCTORS for Isolating Switch (AIS1).***
Field Wiring According to Bending Space (AWG or MCM). Terminals AL1 - AL2 - AL3

Bending Space	5 " (127 mm)							8 " (203 mm)		10 " (254 mm)
HP / Voltage	5	7.5	10	15	20	25	30	40	50	60
208	1x (10 to 1/0)	1x (6 to 1/0)	1x (6 to 1/0)	1x (4 to 1/0)	1x (3 to 1/0)	1x (1 to 1/0)	1x (1/0)	1x (3/0)	1x (4/0 to 250)	1x (300) ** or 1x (250) 90°C *
220 to 240	1x (10 to 1/0)	1x (8 to 1/0)	1x (6 to 1/0)	1x (4 to 1/0)	1x (3 to 1/0)	1x (2 to 1/0)	1x (1 to 1/0)	1x (2/0 to 3/0)	1x (3/0) 90°C *	1x (250)
380 to 416	1x (10 to 1/0)	1x (10 to 1/0)	1x (10 to 1/0)	1x (6 to 1/0)	1x (6 to 1/0)	1x (4 to 1/0)	1x (4 to 1/0)	1x (2 to 1/0)	1x (1 to 1/0)	1x (1/0)
440 to 480	1x (10 to 1/0)	1x (10 to 1/0)	1x (10 to 1/0)	1x (8 to 1/0)	1x (6 to 1/0)	1x (6 to 1/0)	1x (6 to 1/0)	1x (4 to 1/0)	1x (2 to 1/0)	1x (1 to 1/0)
600	1x (10 to 1/0)	1x (10 to 1/0)	1x (10 to 1/0)	1x (10 to 1/0)	1x (8 to 1/0)	1x (6 to 1/0)	1x (6 to 1/0)	1x (4 to 1/0)	1x (4 to 1/0)	1x (2 to 1/0)

Bending Space	12 " (305 mm)				16 " (406 mm)***						
HP / Voltage	75	100	125	150	200	250	300	350	400	450	500
208	2x (2/0 to 500)	2x (4/0 to 500)	2x (300 to 500)	2x (350 to 500)	3x (300 to 500)	--------	--------	--------	--------	--------	--------
220 to 240	1x (350) ** N/A	2x (3/0 to 500)	2x (250 to 500)	2x (300 to 500)	2x (500)	3x (400 to 500)	--------	--------	--------	--------	--------
380 to 416	1x (3/0 to 250)	1x (250)	Consult Factory	1x (500)	Consult Factory	2x (300 to 500)	2x (500)	3x (300 to 500)	3x (350 to 500)	3x (400 to 500)	--------
440 to 480	1x (1/0 to 250)	1x (3/0 to 250)	1x (250)	1x (250) 90°C *	1x (500)	Consult Factory	2x (300 to 500)	2x (400 to 500)	3x (250 to 500)	3x (300 to 500)	3x (350 to 500)
600	1x (1 to 1/0)	1x (2/0 to 250)	1x (4/0 to 250)	1x (4/0 to 250)	1x (350 to 500)	1x (500)	Consult Factory	2x (300 to 500)	2x (350 to 500)	2x (400 to 500)	2x (500)
Bending Space	5 " (127 mm)	8 " (203 mm)			12 " (305 mm)						

* For standard enclosure, use 90°C aluminium wire. Consult Factory for Use of Conductors Rated Lower than 90°C.
** Consult Factory
*** Aluminum is not permitted in Canada.

Power Terminals

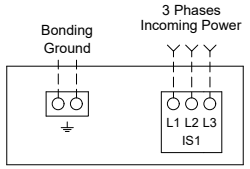

***Only for 16"(406 mm) bending space

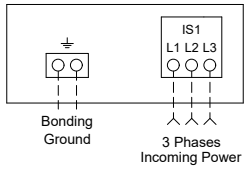

Notes:
1 - For proper wire sizing, refer to NFPA70 and NEC (USA) or CEC (Canada) or local code.
2 - Controller suitable for use as service equipment in USA.
3 - Controller use as service equipment prohibited in Canada.
4 - For more accurate motor connections refer to motor manufacturer or motor nameplate.
5 - Controller is phase sensitive. Incoming lines must be connected in ABC sequence.

Drawing for information only.
Manufacturer reserves the right to modify this drawing without notice.
Contact manufacturer for "As Built" drawing.

Copyright © 2026 Tornatech Inc. All right reserved. This drawing and the information contained or depicted herein are the sole property of Tornatech Inc. Copies are communicated to the recipient in strict confidence and may not be retransmitted, published, reproduced, copied or used in any manner, including as the basis for the manufacture or sale of any products, without the express prior written consent of Tornatech Inc.

TORNATECH

© Tornatech, Inc. Not for construction. Subject to change without notice.

		BY	DD/MM/YY
DRAWN BY		MLC	04/10/24
FINAL APPROVAL		FC	07/11/24

ELECTRIC FIRE PUMP CONTROLLER

MODEL: GPW

BUILT TO THE LATEST EDITION OF THE NFPA20 & NFPA70

NYC Dpt of Building Approved

DRAWING NUMBER GPX-TD904/E

DWG REV. 1

SHEET 1 OF 1

COPPER CONDUCTORS for Motor Connection (1M-2M).
Field Wiring According to Bending Space (AWG or MCM). Terminals T1-T2-T3-T4-T5-T6

HP / Voltage	5	7.5	10	15	20	25	30	40	50	60
208	1x (10 to 4)	1x (10 to 4)	1x (10 to 4)	1x (8 to 4)	1x (8 to 4)	1x (6 to 4)	1x (6 to 4)	1x (4 to 2/0)	1x (2 to 2/0)	1x (1 to 2/0)
220 to 240	1x (10 to 4)	1x (10 to 4)	1x (10 to 4)	1x (8 to 4)	1x (8 to 4)	1x (6 to 4)	1x (6 to 4)	1x (4)	1x (3 to 2/0)	1x (2 to 2/0)
380 to 416	1x (10 to 2/0)	1x (10 to 2/0)	1x (10 to 2/0)	1x (10 to 2/0)	1x (10 to 2/0)	1x (10 to 2/0)	1x (8 to 2/0)	1x (8 to 2/0)	1x (6 to 2/0)	1x (4 to 2/0)
440 to 480	1x (10 to 2/0)	1x (10 to 2/0)	1x (10 to 2/0)	1x (10 to 2/0)	1x (10 to 2/0)	1x (10 to 2/0)	1x (10 to 2/0)	1x (8 to 2/0)	1x (8 to 2/0)	1x (6 to 2/0)
600	1x (10 to 2/0)	1x (10 to 2/0)	1x (10 to 2/0)	1x (10 to 2/0)	1x (10 to 2/0)	1x (10 to 2/0)	1x (10 to 2/0)	1x (10 to 2/0)	1x (8 to 2/0)	1x (8 to 2/0)

HP / Voltage	75	100	125	150	200	250	300	350	400	450	500
208	1x (2/0 to 3/0)	1x (3/0 to 300)	1x (250 to 300)	2x (1/0 to 300)	2x (3/0 to 300)	--------	--------	--------	--------	--------	--------
220 to 240	1x (1/0 to 2/0)	1x (3/0)	1x (4/0 to 300)	1x (300)	2x (2/0 to 300)	2x (4/0 to 300)	--------	--------	--------	--------	--------
380 to 416	1x (4 to 2/0)	1x (2 to 2/0)	1x (1/0 to 2/0)	1x (2/0 to 3/0)	1x (4/0 to 300)	1x (300)	2x (2/0 to 300)	2x (3/0 to 300)	2x (4/0 to 300)	2x (4/0 to 600)	--------
440 to 480	1x (4 to 2/0)	1x (3 to 2/0)	1x (2 to 2/0)	1x (1/0 to 3/0)	1x (2/0 to 300)	1x (4/0 to 300)	2x (1/0 to 300)	2x (1/0 to 300)	2x (2/0 to 300)	2x (3/0 to 300)	2x (4/0 to 300)
600	1x (6 to 2/0)	1x (4 to 2/0)	1x (3 to 2/0)	1x (2 to 3/0)	1x (1/0 to 300)	2x (3 to 300)	2x (2 to 300)	2x (1 to 300)	2x (1/0 to 300)	2x (1/0 to 300)	2x (2/0 to 300)

ALUMINUM CONDUCTORS for Contactor (1M-2M).***
Field Wiring According to Bending Space (AWG or MCM). Terminals T1-T2-T3-T4-T5-T6

HP / Voltage	5	7.5	10	15	20	25	30	40	50	60
208	1x (12 to 2/0) **	1x (10 to 2/0) **	1x (10 to 2/0) **	1x (8 to 2/0) **	1x (6 to 2/0) **	1x (4 to 2/0) **	1x (4 to 2/0) **	1x (2 to 2/0)	1x (1/0 to 2/0)	1x (2/0)
220 to 240	1x (12 to 2/0) **	1x (10 to 2/0) **	1x (10 to 2/0) **	1x (8 to 2/0) **	1x (8 to 2/0) **	1x (6 to 2/0) **	1x (4 to 2/0) **	1x (2 to 2/0) **	1x (1 to 2/0)	1x (1/0 to 2/0)
380 to 416	1x (12 to 2/0) **	1x (12 to 2/0) **	1x (12 to 2/0) **	1x (10 to 2/0) **	1x (10 to 2/0) **	1x (8 to 2/0) **	1x (8 to 2/0) **	1x (6 to 2/0) **	1x (4 to 2/0) **	1x (3 to 2/0) **
440 to 480	1x (12 to 2/0) **	1x (12 to 2/0) **	1x (12 to 2/0) **	1x (12 to 2/0) **	1x (10 to 2/0) **	1x (10 to 2/0) **	1x (8 to 2/0) **	1x (8 to 2/0) **	1x (6 to 2/0) **	1x (4 to 2/0) **
600	1x (12 to 2/0) **	1x (12 to 2/0) **	1x (12 to 2/0) **	1x (12 to 2/0) **	1x (10 to 2/0) **	1x (10 to 2/0) **	1x (10 to 2/0) **	1x (8 to 2/0) **	1x (8 to 2/0) **	1x (6 to 2/0) **

HP / Voltage	75	100	125	150	200	250	300	350	400	450	500
208	1x (3/0)	Consult Factory	1x (300) 90°C *	2x (3/0 to 300)	2x (250 to 300)	--------	--------	--------	--------	--------	--------
220 to 240	1x (2/0) 90°C *	Consult Factory	1x (300)	1x (300) 90°C *	2x (4/0 to 300)	2x (300 to 300)	--------	--------	--------	--------	--------
380 to 416	1x (2 to 2/0) **	1x (1/0 to 2/0) **	1x (1/0 to 2/0)	1x (2/0 to 3/0)	1x (300)	Consult Factory	2x (4/0 to 300)	2x (250 to 300)	2x (300)	2x (300 to 600)	--------
440 to 480	1x (3 to 2/0) **	1x (2 to 2/0) **	1x (1/0 to 2/0)	1x (2/0 to 3/0)	1x (4/0 to 300)	1x (300)	2x (2/0 to 300)	2x (3/0 to 300)	2x (4/0 to 300)	2x (250 to 300)	2x (300)
600	1x (4 to 2/0) **	1x (3 to 2/0)	1x (2 to 2/0)	1x (1/0 to 3/0)	1x (3/0 to 300)	2x (2 to 300)	2x (2 to 300)	2x (2/0 to 300)	2x (3/0 to 300)	2x (3/0 to 300)	2x (4/0 to 300)

*For standard enclosure, use 90°C aluminium wire. Consult Factory for Use of Conductors Rated Lower than 90°C.
**Option V659 required.
***Aluminum is not permitted in Canada.

Motor Terminals

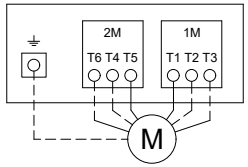

Model: GPW

Notes:
1 - For proper wire sizing, refer to NFPA70 and NEC (USA) or CEC (Canada) or local code.
2 - Controller suitable for use as service equipment in USA.
3 - Controller use as service equipment prohibited in Canada.
4 - For more accurate motor connections refer to motor manufacturer or motor nameplate.
5 - Controller is phase sensitive. Incoming lines must be connected in ABC sequence.

Drawing for information only.
Manufacturer reserves the right to modify this drawing without notice.
Contact manufacturer for "As Built" drawing.

Copyright © 2026 Tornatech Inc. All right reserved. This drawing and the information contained or depicted herein are the sole property of Tornatech Inc. Copies are communicated to the recipient in strict confidence and may not be retransmitted, published, reproduced, copied or used in any manner, including as the basis for the manufacture or sale of any products, without the express prior written consent of Tornatech Inc.

TORNATECH

© Tornatech, Inc. Not for construction.
Subject to change without notice.

		BY	DD/MM/YY
DRAWN BY		ACD	18/12/23
FINAL APPROVAL		FC	19/12/23

ELECTRIC FIRE PUMP CONTROLLER

MODEL:GPX

BUILT TO THE LATEST EDITION OF THE NFPA20 & NFPA70

NYC Dpt of Building Approved

DRAWING NUMBER CDD
GPX-TD803/E
DWG REV. 0
SHEET 1 OF 1

Field Connections

Terminals Wire Size:
24 - 12 AWG
0.5 Nm

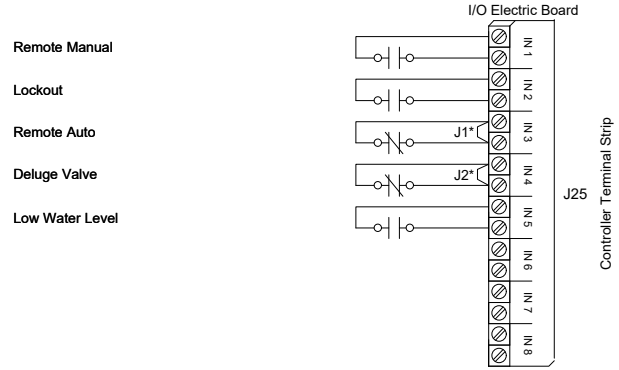

Network Connections

Terminals Wire Size:
Shielded Female Connector RJ45

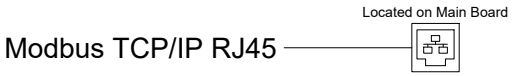

Alarm Contacts

Terminals Wire Size:
24 - 12 AWG
0.5 Nm

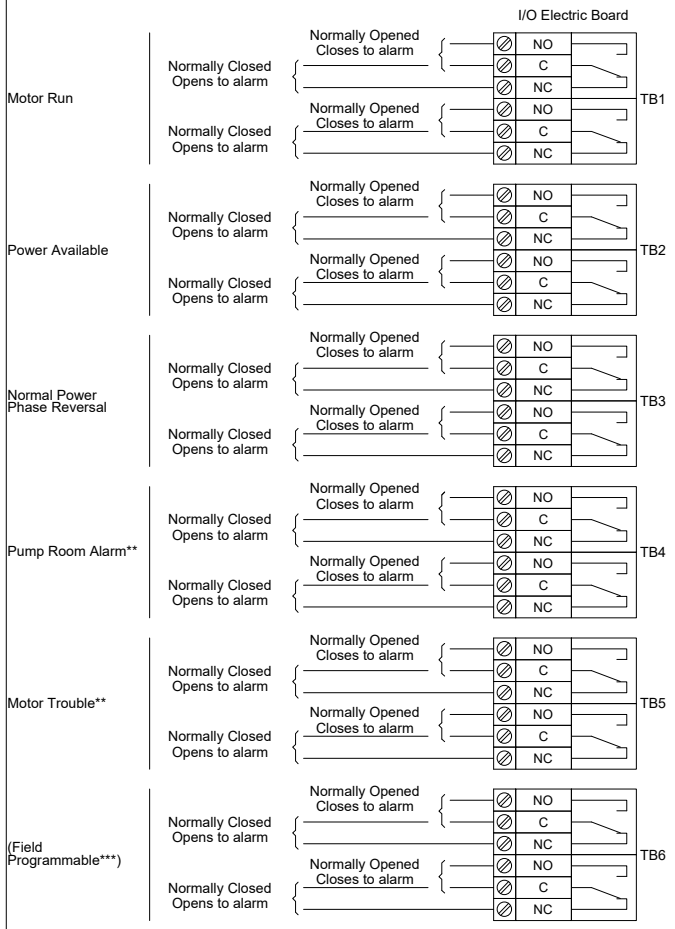

* Remove jumper to use this feature
** Re-assignable
*** Not available on GPS models

Copyright © 2026 Tornatech Inc. All right reserved. This drawing and the information contained or depicted herein are the sole property of Tornatech Inc. Copies are communicated to the recipient in strict confidence and may not be retransmitted, published, reproduced, copied or used in any manner, including as the basis for the manufacture or sale of any products, without the express prior written consent of Tornatech Inc.

		BY	DD/MM/YY
TORNATECH	DRAWN BY	ACD	28/02/23
	FINAL APPROVAL	FC	28/02/23

© Tornatech, Inc. Not for construction. Subject to change without notice.

AUTOMATIC TRANSFER SWITCH FOR ELECTRIC FIRE PUMP CONTROLLER

MODEL: GPU

BUILT TO THE LATEST EDITION OF THE NFPA20 & NFPA70

NYC Dpt of Building Approved

DRAWING NUMBER: GPU-TD801/E

DWG REV. 0

SHEET 1 OF 1

Remote Alarm Terminals (TSB1)

Terminals Wire Size:
24 - 12 AWG
0.5 Nm

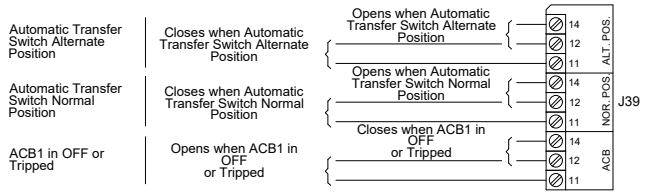

Control Terminals (TSB1)

Terminals Wire Size:
24 - 12 AWG
0.5 Nm

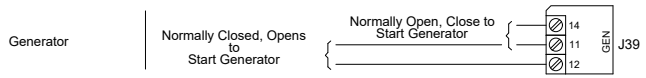

Copyright © 2026 Tornatech Inc. All right reserved. This drawing and the information contained or depicted herein are the sole property of Tornatech Inc. Copies are communicated to the recipient in strict confidence and may not be retransmitted, published, reproduced, copied or used in any manner, including as the basis for the manufacture or sale of any products, without the express prior written consent of Tornatech Inc.