TORNATECH

Project: _____

Customer: _____

Engineer: _____

Pump Manufacturer: _____

Technical Data
Submittal Document

VPx Series

Full Service - Variable Speed
Electric Fire Pump Controller
with Automatic Power Transfer Switch

Contents:

Data Sheets
Dimensional Data
Wiring Schematics
Field Connections

Note: The drawings included in this package are for controllers covered under our standard offering. Actual AS BUILT drawings may differ from what is shown in this package.

August 2025

Select Bypass starting method

☐ **Model VPA+VPU**
Across the line

*

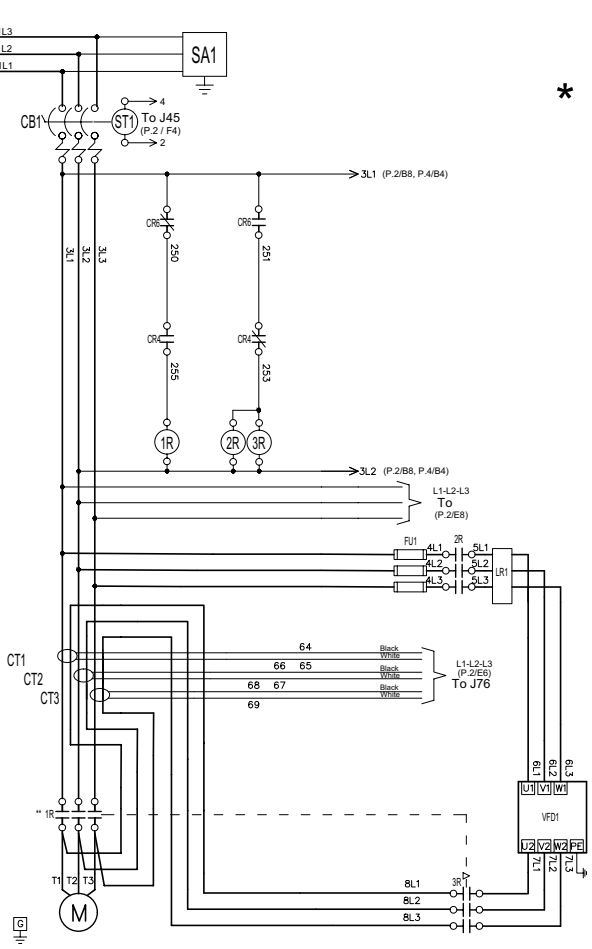

☐ **Model VPS+VPU**
Soft Start Soft Stop

*

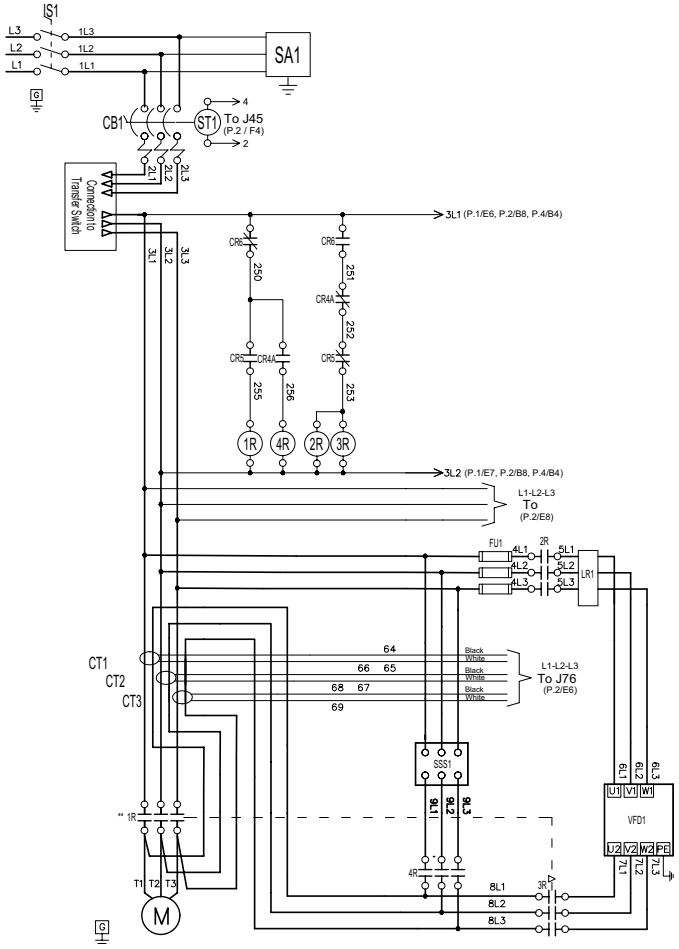

*From normal incoming power through Disconnecting Means (IS/CB)
*For Disconnecting Means details see page 3

Select voltage and power rating

Voltage	Select Voltage	HP	Select HP
200V/3ph/50-60Hz[1]	☐	5	☐
208V/3ph/50-60Hz[1]	☐	7.5	☐
220V/3ph/50-60Hz[2]	☐	10	☐
230V/3ph/50-60Hz[2]	☐	15	☐
240V/3ph/50-60Hz[2]	☐	20	☐
380V/3ph/50-60Hz[3]	☐	25	☐
400V/3ph/50-60Hz[3]	☐	30	☐
415V/3ph/50-60Hz[3]	☐	40	☐
440V/3ph/50-60Hz[4]	☐	50	☐
460V/3ph/50-60Hz[4]	☐	60	☐
480V/3ph/50-60Hz[4]	☐	75	☐
575V/3ph/60Hz[2]	☐	100	☐
600V/3ph/60Hz[2]	☐	125	☐
		150	☐
		200	☐
		250	☐
		300	☐
		350	☐
		400	☐
		450	☐

Notes: [1] Maximum power rating is 75HP.
[2] Maximum power rating is 100HP.
[3] Maximum power rating is 350HP.
[4] Maximum power rating is 450HP.

This is a Marketing document. Please consult factory for more information.
Manufacturer reserves the right to modify this information without notice

Technical Data

VPx Series Full Service Variable Speed Electric Fire Pump Controller with Automatic Power Transfer Switch

Standard, Listings, Approvals and Certifications	**Built to NFPA 20**	
	Underwriters Laboratory (UL)	• UL218 - Fire Pump Controllers
	FM Global	Class 1321/1323
Enclosure	**Protection Rating**	
	Standard: NEMA 12 ventilated assembly	
	Accessories • Gland plate(s) • Lifting Lugs • Keylock handle	**Paint Specifications** • Red RAL3002 • Powder coating • Glossy textured finish

Shortcircuit Withstand Rating	**200V 60Hz**	**208V to 240V 60Hz**	**380V to 415V 50 Hz / 60Hz**	**440V to 480V 60Hz**	**575V to 600V 60Hz**
	HP (kw)				
	5 to 75	5 to 100	5 to 350	5 to 450	5 to 100
	Standard 100kA				Standard 50kA

Ambient Temperature Rating	**Standard**: 4°C to 40°C / 39°F to 104°F
Surge Suppression	Surge arrestor rated to suppress surges above line voltage
Disconnecting Means	• Isolating switch and circuit breaker assembly: - Door interlocked in the ON position - Isolating switch rated not less than 115% of motor full load current - Circuit breaker continuous rating not less than 115% of motor full load current - Overcurrent sensing non-thermal type, magnetic only - Instantaneous trip setting of not more than 20 times the motor full load current • Common flange mounted operating handle • Suitable as service entrance equipment (not applicable for installations in Canada).
Service Entrance Rating	Suitable as service entrance equipment
Emergency Start Handle	• Flange mounted • Integrated limit switch • Pull and latch activation • Across the line start (direct on line)
Locked Rotor Protector	• Operate shunt trip to open circuit breaker • Trip between 8 and 20 seconds • Factory set at 600% of motor full load current
Electrical Readings	• Voltage phase to phase (normal power) • Amperage of each phase when motor is running
Pressure Readings	• Continuous system pressure display • Constant pressure output set-point • Cut-in and Cut-out pressure settings

This is a Marketing document. Please consult factory for more information.
Manufacturer reserves the right to modify this information without notice

Pressure and Event recorder	• Pressure readings with date stamp • Event recording with date stamp • Under regular maintained operation, events are stored in memory for the life of the controller. • Data viewable on operator interface display screen • Downloadable by USB port to external memory device or wireless connection to manufacturers App (mobile device).
Pressure Sensing	• Pressure transducers and run test solenoid valve assembly for fresh water application • Pressure sensing line connection 1/2” Female NPT • Drain connection 3/8” • Rated for 0-500PSI working pressure (standard display at 0-300PSI) • Externally mounted with protective cover

Variable Speed Drive Circuit	• Variable speed drive (VFD)
	• Line reactor 5%
	• Mode selector switch
	  • VFD
	  • Bypass

Audible Alarm	Alarm buzzer - 85dB at 3 meters
Visual Indications	• Power available • Motor run • Periodic test • Manual start • Deluge valve start • Remote automatic start • Remote manual start • Emergency start • Pump on demand/Automatic start • Pump room temperature (ºF or ºC) • Lockout • VFD fault • VFD bypass • VFD Hertz
Visual & Audible Alarms	Visual • Control voltage not healthy • Invalid cut-in • Lock rotor current • Loss of power • Low ambient temperature • Low water level • Motor trouble • Phase reversal (normal power) • Overcurrent • Overvoltage • Phase loss L1 • Phase loss L2 • Phase loss L3 • Phase unbalanced • Pressure transducer fault detected • Pump on demand • Pump room alarm • Service required • Undercurrent • Undervoltage • Check weekly test solenoid • Weekly test cut-in reached Visual and audible • Fail to start

Remote Alarm Contacts	DPDT-8A-250V.AC
	• Power available
	• Phase reversal
	• Motor run
	• Common pump room alarm (field re-assignable)**
	  • Overvoltage
	  • Undervoltage
	  • Phase unbalance
	  • Low pump room temperature
	  • High Pump room temperature
	• Common motor trouble (field re-assignable)**
	  • Overcurrent
	  • Fail to start
	  • Undercurrent
	  • Ground fault
	• Overpressure
	• Bypass mode
	• VFD failure

**Tornatech reserves the right to use any of these three alarm points for special specific application requirements.

ViZiTouch V2.1 Operator Interface	• Embedded microcomputer with software PLC logic • 7.0” color touch screen (HMI technology) • Upgradable software • Multi-language		
Communication Protocol Capability	• Protocol: Modbus • Connection type: Shielded female connector RJ45 • Frame Format: TCP/IP • Addresses: See Technical Bulletin - Modbus TCP/IP Communication Protocol for Electric Fire Pump Controllers with Automatic Transfer Switch		
Operation	**Automatic Start**	• Start on pressure drop • Remote start signal from automatic device • Deluge valve start	
	Manual Start	• Start pushbutton • Run test pushbutton • Remote start from manual device	
	Stopping	• Manual with Stop pushbutton • Automatic after expiration of minimum run timer ***	
	Timers	Field Adjustable & Visual Countdown	• Minimum run timer ***(off delay) • Sequential start timer (on delay) • Periodic test timer
	Actuation	Visual Indication	• Pressure • Non-pressure
	Mode		• Automatic • Non-automatic

***Can only be used if approved by the AHJ

This is a Marketing document. Please consult factory for more information.
Manufacturer reserves the right to modify this information without notice

☐	A4	Flow switch provision
☐	A8	Foam pump application w/o pressure transducer and run test solenoid valve.
☐	A9	Low zone pump control function
☐	A10	Middle zone pump control function
☐	A11	High zone pump control function
☐	A13	Non-pressure actuated controller w/o pressure transducer and run test solenoid valve
☐	A16	Lockout/interlock circuit from equipment installed inside the pump room
☐	B11	Built in alarm panel (120V.AC supervisory power) providing indication for: • Audible alarm & silence pushbutton for motor run, phase reversal, loss of phase. • Pilot lights for loss of phase & supervisory power available
☐	B11B	Built in alarm panel same as B11 but 220-240VAC supervisory power
☐	B19A	High motor temperature c/w thermoster relay and alarm contacts (DPDT)
☐	B19B	High motor temperature c/w PT100 relay and alarm contacts (DPDT)
☐	B21	Ground fault alarm detection c/w visual indication and alarm contact (DPDT)
☐	C1	Extra motor run alarm contact (DPDT)
☐	C4	Periodic test alarm contact (DPDT)
☐	C6	Low discharge pressure alarm contact (DPDT)
☐	C7	Low pump room temperature alarm contact (DPDT)
☐	C10	Low water reservoir level alarm contact (DPDT)
☐	C11	High electric motor temperature alarm contact (DPDT)
☐	C12	High electric motor vibration c/w visual indication and alarm contact (DPDT)
☐	C14	Pump on demand / automatic start alarm contact (DPDT)
☐	C15	Pump fail to start alarm contact (DPDT)
☐	C16	Control voltage healthy alarm contact (DPDT)
☐	C17	Flow meter valve loop open c/w visual indication and alarm contact (DPDT)
☐	C18	High water reservoir level c/w visual indication and alarm contact (DPDT)
☐	C19	Emergency start alarm contact (DPDT)

☐	C20	Manual start alarm contact (DPDT)
☐	C21	Deluge valve start alarm contact (DPDT)
☐	C22	Remote automatic start alarm contact (DPDT)
☐	C23	Remote manual start alarm contact (DPDT)
☐	C24	High pump room temperature alarm contact (DPDT)
☐	C25	Second set of standard alarm contacts (DPDT) (Typical for city of Los Angeles and Denver)
☐	Cx	Additional visual and alarm contact (Specify function) (DPDT)
☐	D1	Low suction pressure transducer for fresh water rated at 0-500PSI with visual indication and alarm contact
☐	D1A	Low suction pressure transducer for sea water rated at 0-500PSI with visual indication and alarm contact
☐	D5	Pressure transducer and run test solenoid valve for fresh water rated for 0-500PSI (for factory calibration purposes only)
☐	D5D	Pressure transducer and run test solenoid valve for sea water rated for 0-500PSI
☐	D14	Anti-condensation heater & thermostat
☐	D14A	Anti-condensation heater & humidistat
☐	D14B	Anti-condensation heater & thermostat & humidistat
☐	D15	Tropicalization
☐	D27	Motor heater connection (external single phase power source and heater on/off contact)
☐	D27A	Motor heater connection (internal single phase power source and heater on/off contact)
☐	D28	Customized drawing set
☐	D34A	Field programmable I/O board - 5 Input / 5 output
☐	D36	Redundant pressure transducer for fresh water rated for 0-500PSI
☐	D36A	Redundant pressure transducer for sea water rated for 0-500PSI
☐	D43	Seismic Certification compliant to CBC 2019, IBC 2018 rigid base/wall mounted only
☐	D44	Special Seismic Certification compliant to OSHPD rigid base/wall mounted only

Note: Options chosen from this page are not electrically represented on the wiring schematics in this submittal package.

☐ E1	Permanent load shedding contacts
☐ E2	Temporary pump motor start period load shedding contacts
☐ E3	Temporary & permanent load shedding contacts
☐ F2	Anti condensation heater & thermostat (alternate power section)
☐ F2A	Anti condensation heater & humidistat (alternate power section)
☐ F2B	Anti condensation heater & thermostat & humidistat (alternate power section)

Additional Options:

☐ _____

☐ _____

☐ _____

☐ _____

☐ _____

Note: Options chosen from this page are not electrically represented on the wiring schematics in this submittal package.

ViZiTouch V2.1 Operator Interface

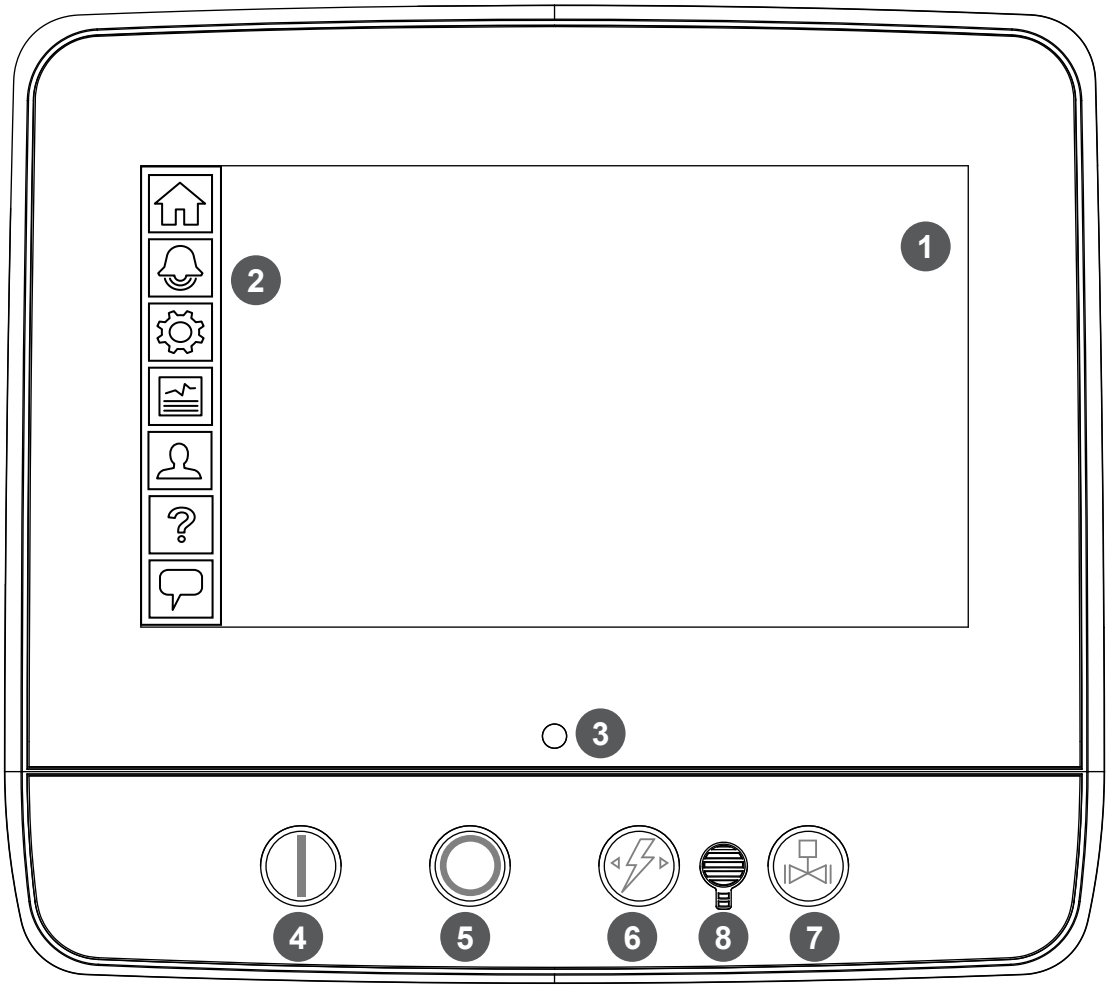

1 - Color touch screen
2 - Onscreen menu
- HOME page
- ALARM page
- CONFIGURATION page
- HISTORY page
- SERVICE page
- MANUAL page
- LANGUAGES page

3 - Power LED (3 colors)
4 - START button
5 - STOP button
6 - TRANSFER SWITCH TEST button
7 - RUN TEST button
8 - Alarm buzzer

This is a Marketing document. Please consult factory for more information.
Manufacturer reserves the right to modify this information without notice

TORNATECH

© Tornatech, Inc. Not for construction.
Subject to change without notice.

	BY	DD/MM/YY
DRAWN BY	ZS	21/03/24
FINAL APPROVAL	FC	21/03/24

ELECTRIC FIRE PUMP CONTROLLER WITH AUTOMATIC TRANSFER SWITCH

VPA / VPS + VPU

BUILT TO THE LATEST EDITION OF THE NFPA20 & NFPA70

THIRD ANGLE PROJECTION

DRAWING NUMBER VPX-DI814-2 /E
DWG REV. 0
SHEET 1 OF 1

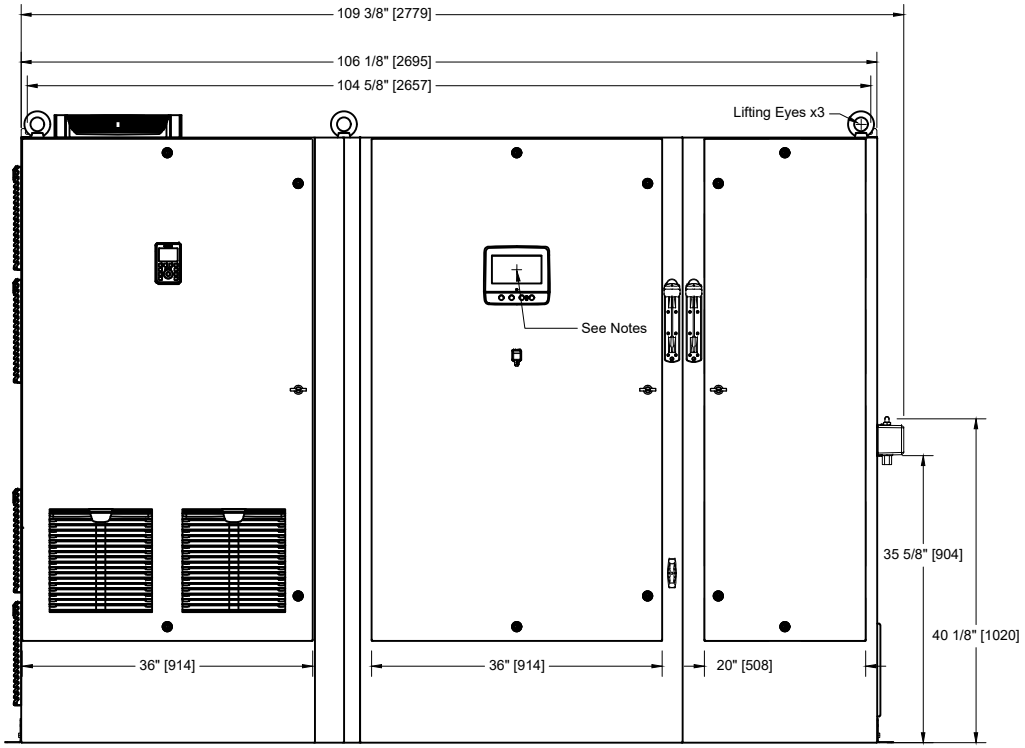

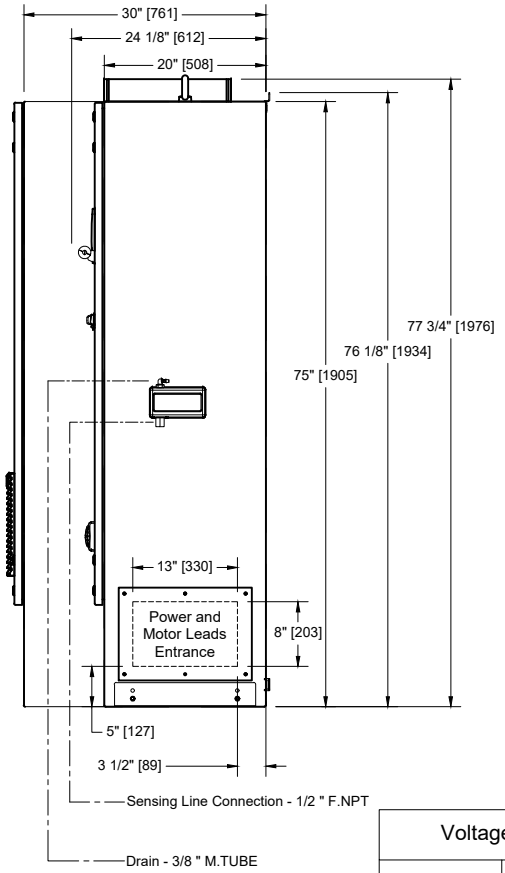

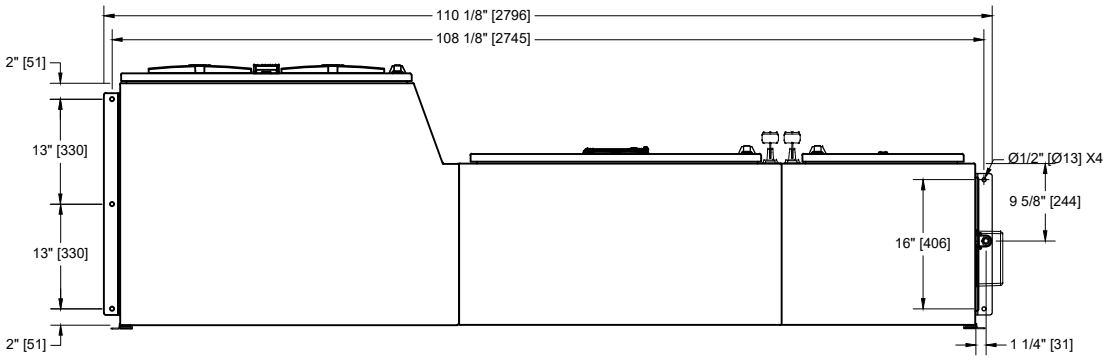

Voltage / Power Table		
Voltage	Min HP	Max HP
380 - 400 - 415	200	250
440 - 480	250	300

Notes:

- Standard: NEMA 12
- Standard paint : textured red RAL 3002.
- All dimensions are in inches [millimeters].
- Center of screen: 29-5/8" [751] from bottom (no feet).
- Side conduit entrance through removable gland plate recommended.
- Use watertight conduit and connector only.
- Protect equipment against drilling chips.
- Door swing equal to door width.

Copyright © 2025 Tornatech Inc. All right reserved. This drawing and the information contained or depicted herein are the sole property of Tornatech Inc. Copies are communicated to the recipient in strict confidence and may not be retransmitted, published, reproduced, copied or used in any manner, including as the basis for the manufacture or sale of any products, without the express prior written consent of Tornatech Inc.

TORNATECH

© Tornatech, Inc. Not for construction.
Subject to change without notice.

	BY	DD/MM/YY
DRAWN BY	ZS	10/07/23
FINAL APPROVAL	FC	10/07/23

ELECTRIC FIRE PUMP CONTROLLER WITH AUTOMATIC TRANSFER SWITCH

VPA / VPS + VPU

BUILT TO THE LATEST EDITION OF THE NFPA20 & NFPA70

THIRD ANGLE PROJECTION

DRAWING NUMBER VPX-DI814 /E
DWG REV. 0
SHEET 1 OF 1

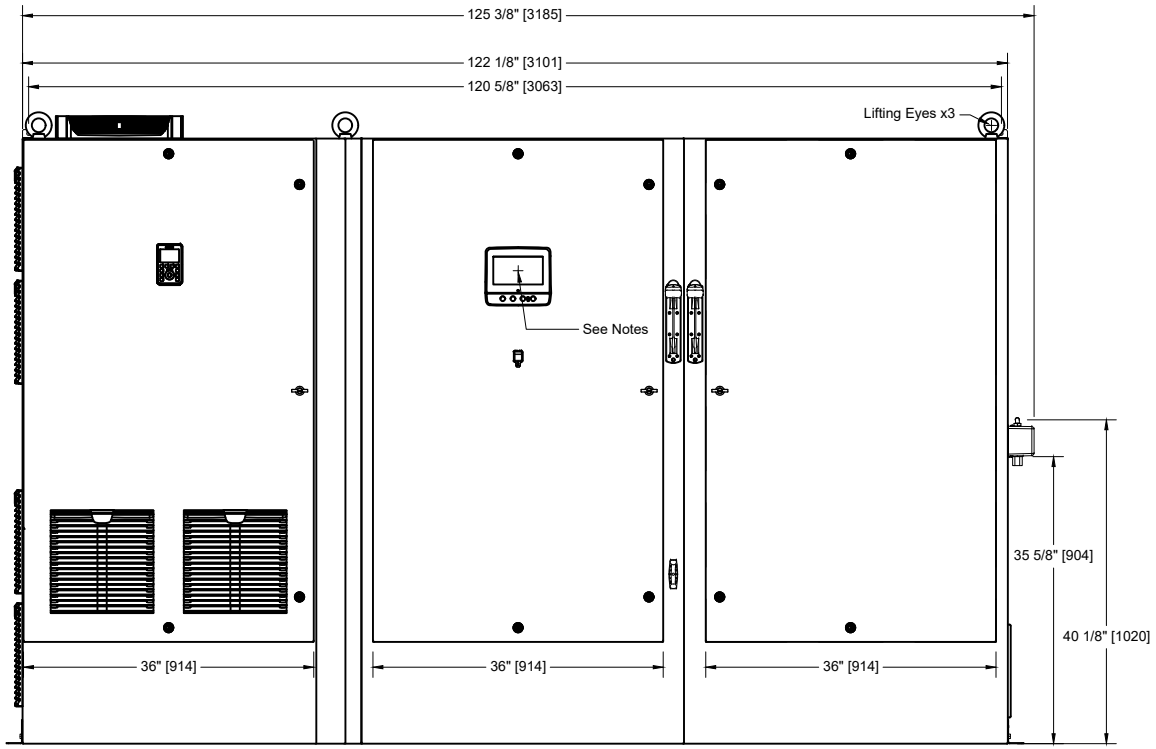

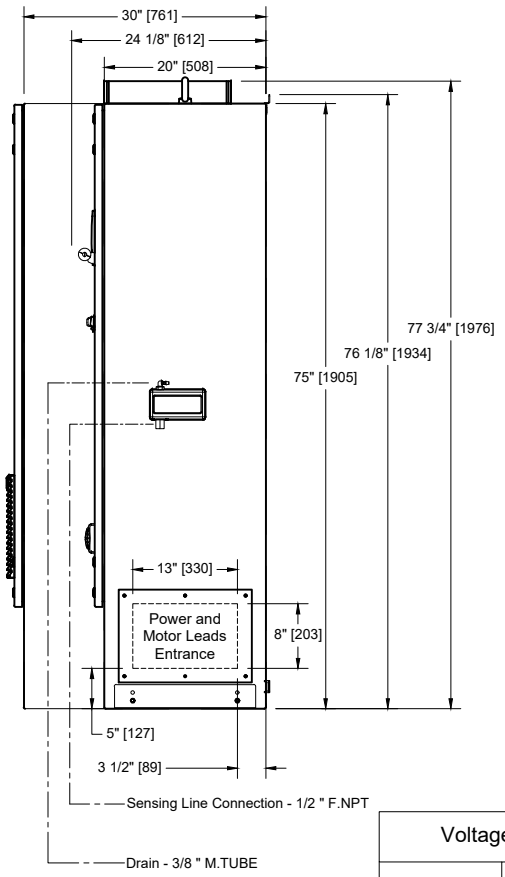

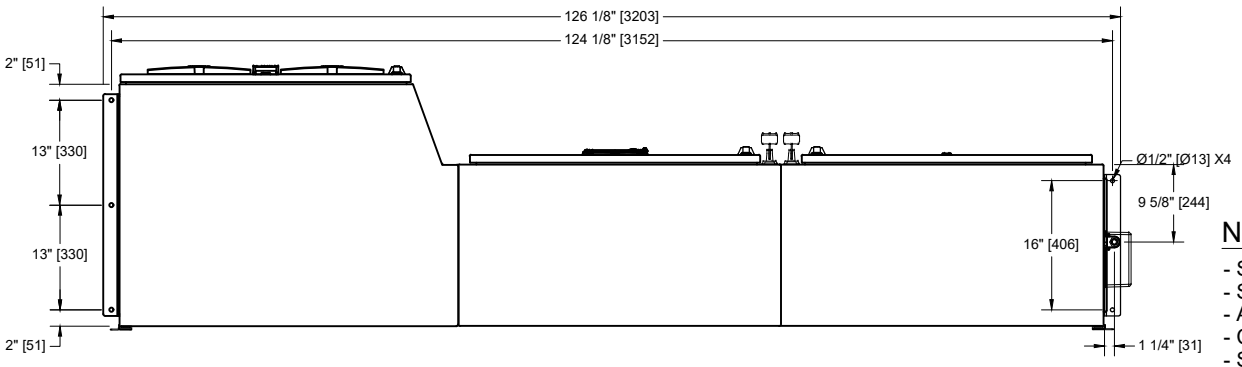

Voltage / Power Table		
Voltage	Min HP	Max HP
380 - 400 - 415	200	250
440 - 480	250	300

Notes:

- Standard: NEMA 12
- Standard paint : textured red RAL 3002.
- All dimensions are in inches [millimeters].
- Center of screen: 29-5/8" [751] from bottom (no feet).
- Side conduit entrance through removable gland plate recommended.
- Use watertight conduit and connector only.
- Protect equipment against drilling chips.
- Door swing equal to door width.

Copyright © 2025 Tornatech Inc. All right reserved. This drawing and the information contained or depicted herein are the sole property of Tornatech Inc. Copies are communicated to the recipient in strict confidence and may not be retransmitted, published, reproduced, copied or used in any manner, including as the basis for the manufacture or sale of any products, without the express prior written consent of Tornatech Inc.

TORNATECH

© Tornatech, Inc. Not for construction. Subject to change without notice.

	BY	DD/MM/YY
DRAWN BY	ZS	10/07/23
FINAL APPROVAL	FC	10/07/23

ELECTRIC FIRE PUMP CONTROLLER
VARIABLE SPEED / SOFT STARTER BYPASS STARTING WITH AUTOMATIC TRANSFER SWITCH

MODEL: VPS+VPU

BUILT TO THE LATEST EDITION OF THE NFPA20 & NFPA70

DRAWING NUMBER VPS-WS810 /E

DWG REV. 0

SHEET 1 OF 4

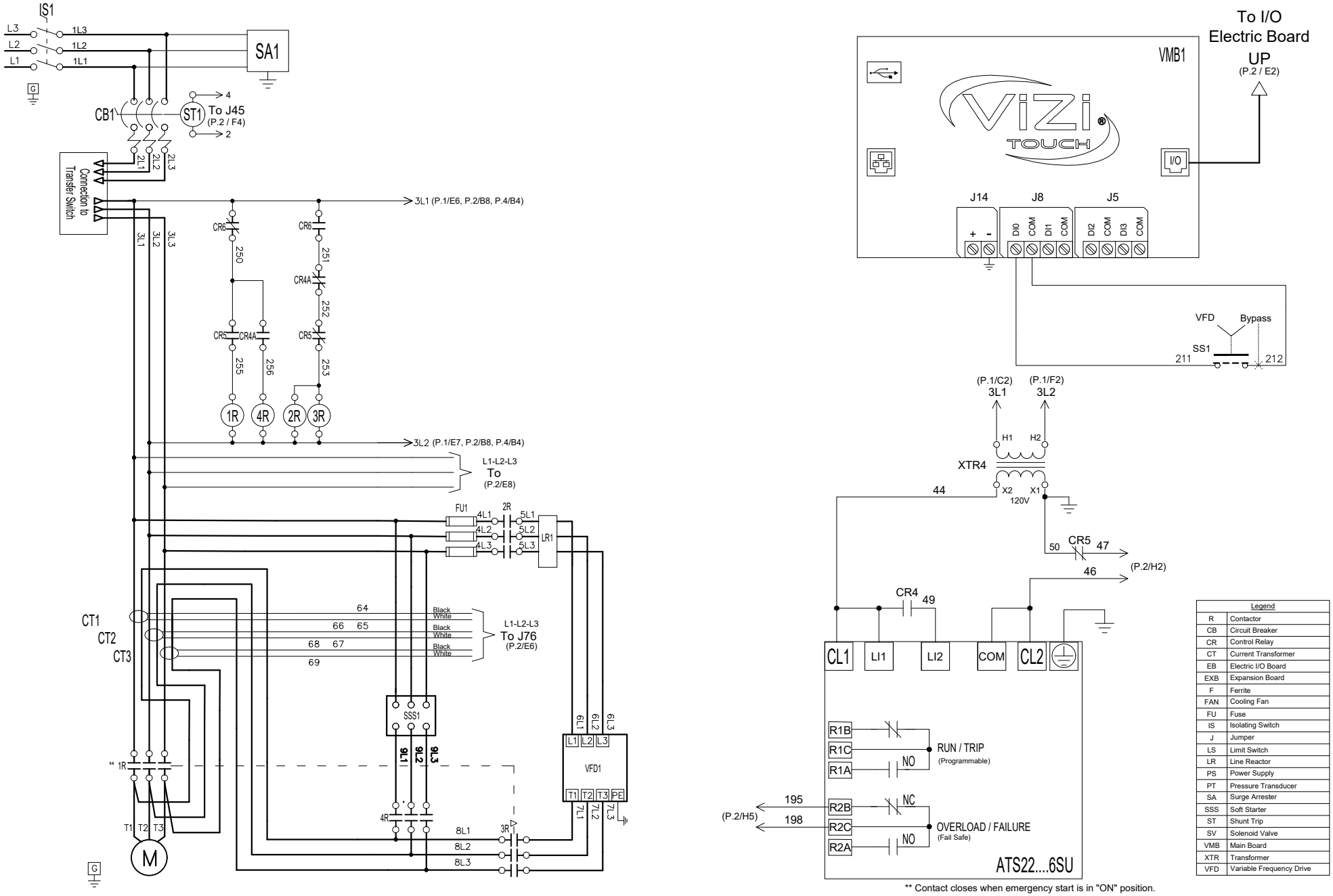

** Contact closes when emergency start is in "ON" position.

Legend	
R	Contactor
CB	Circuit Breaker
CR	Control Relay
CT	Current Transformer
EB	Electric I/O Board
EXB	Expansion Board
F	Ferrite
FAN	Cooling Fan
FU	Fuse
IS	Isolating Switch
J	Jumper
LS	Limit Switch
LR	Line Reactor
PS	Power Supply
PT	Pressure Transducer
SA	Surge Arrester
SSS	Soft Starter
ST	Shunt Trip
SV	Solenoid Valve
VMB	Main Board
XTR	Transformer
VFD	Variable Frequency Drive

Copyright © 2025 Tornatech Inc. All right reserved. This drawing and the information contained or depicted herein are the sole property of Tornatech Inc. Copies are communicated to the recipient in strict confidence and may not be retransmitted, published, reproduced, copied or used in any manner, including as the basis for the manufacture or sale of any products, without the express prior written consent of Tornatech Inc.

TORNATECH

© Tornatech, Inc. Not for construction.
Subject to change without notice.

	BY	DD/MM/YY
DRAWN BY	ZS	10/07/23
FINAL APPROVAL	FC	10/07/23

ELECTRIC FIRE PUMP CONTROLLER
VARIABLE SPEED / SOFT STARTER BYPASS STARTING WITH AUTOMATIC TRANSFER SWITCH

MODEL: VPS+VPU

BUILT TO THE LATEST EDITION OF THE NFPA20 & NFPA70

DRAWING NUMBER VPS-WS810 /E
DWG REV. 0
SHEET 2 OF 4

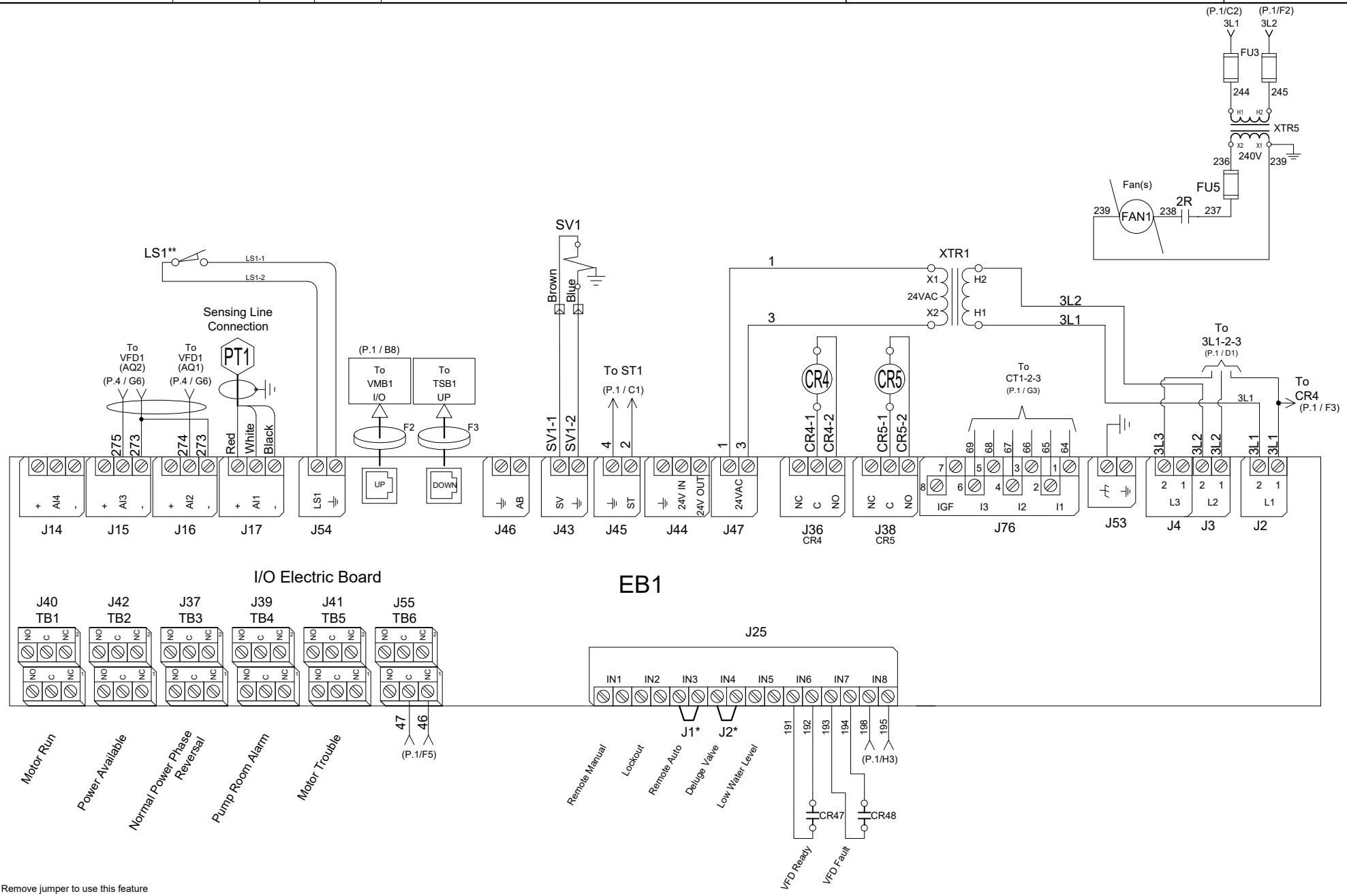

* Remove jumper to use this feature
** Contact closes when emergency start is in "ON" position

Copyright © 2025 Tornatech Inc. All right reserved. This drawing and the information contained or depicted herein are the sole property of Tornatech Inc. Copies are communicated to the recipient in strict confidence and may not be retransmitted, published, reproduced, copied or used in any manner, including as the basis for the manufacture or sale of any products, without the express prior written consent of Tornatech Inc.

TORNATECH

© Tornatech, Inc. Not for construction. Subject to change without notice.

	BY	DD/MM/YY
DRAWN BY	ZS	10/07/23
FINAL APPROVAL	FC	10/07/23

ELECTRIC FIRE PUMP CONTROLLER
VARIABLE SPEED / SOFT STARTER BYPASS STARTING WITH AUTOMATIC TRANSFER SWITCH

MODEL: VPS+VPU

BUILT TO THE LATEST EDITION OF THE NFPA20 & NFPA70

DRAWING NUMBER VPS-WS810 /E

DWG REV. 0

SHEET 3 OF 4

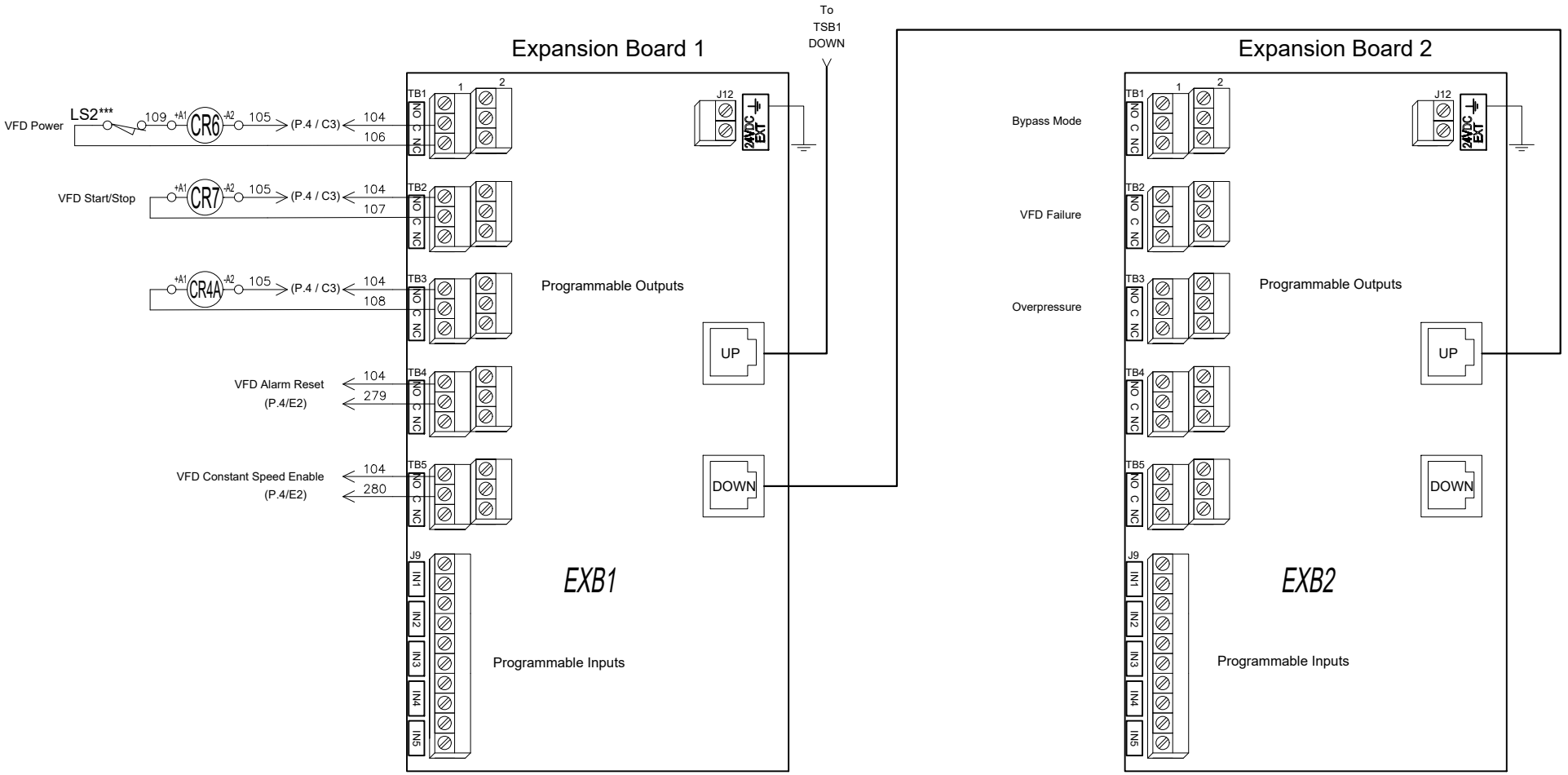

*** Contact opens when emergency start is in "ON" position

Copyright © 2025 Tornatech Inc. All right reserved. This drawing and the information contained or depicted herein are the sole property of Tornatech Inc. Copies are communicated to the recipient in strict confidence and may not be retransmitted, published, reproduced, copied or used in any manner, including as the basis for the manufacture or sale of any products, without the express prior written consent of Tornatech Inc.

TORNATECH

© Tornatech, Inc. Not for construction. Subject to change without notice.

	BY	DD/MM/YY
DRAWN BY	ZS	10/07/23
FINAL APPROVAL	FC	10/07/23

ELECTRIC FIRE PUMP CONTROLLER
VARIABLE SPEED / SOFT STARTER BYPASS STARTING WITH AUTOMATIC TRANSFER SWITCH

MODEL: VPS+VPU

BUILT TO THE LATEST EDITION OF THE NFPA20 & NFPA70

DRAWING NUMBER VPS-WS810 /E

DWG REV. 0

SHEET 4 OF 4

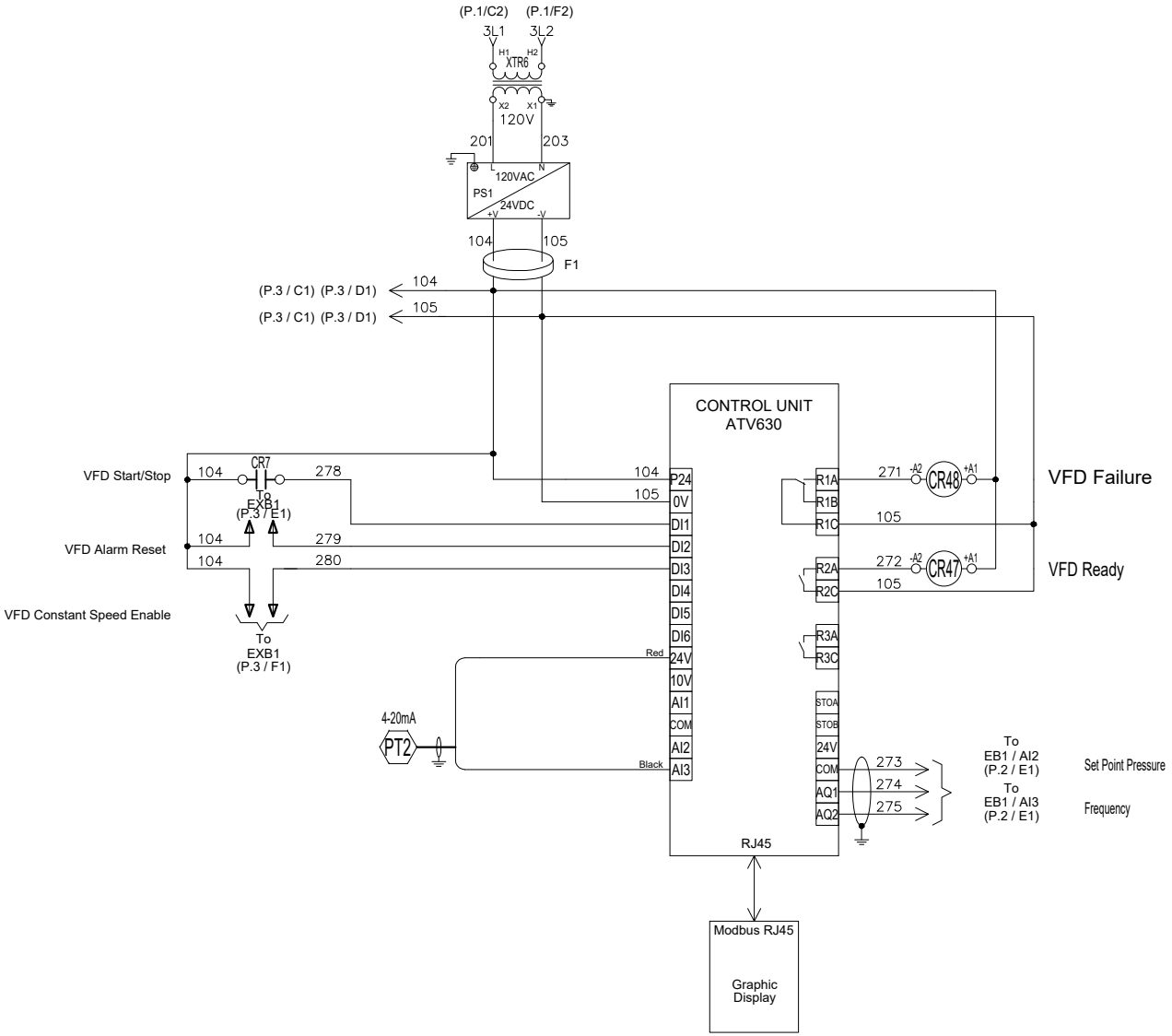

Copyright © 2025 Tornatech Inc. All right reserved. This drawing and the information contained or depicted herein are the sole property of Tornatech Inc. Copies are communicated to the recipient in strict confidence and may not be retransmitted, published, reproduced, copied or used in any manner, including as the basis for the manufacture or sale of any products, without the express prior written consent of Tornatech Inc.

TORNATECH

© Tornatech, Inc. Not for construction. Subject to change without notice.

	BY	DD/MM/YY
DRAWN BY	ZS	21/07/23
FINAL APPROVAL	FC	21/07/23

AUTOMATIC TRANSFER SWITCH FOR ELECTRIC FIRE PUMP CONTROLLER

MODEL: VPU

BUILT TO THE LATEST EDITION OF THE NFPA20 & NFPA70

DRAWING NUMBER: VPU-WS800/E

DWG REV. 0

SHEET 1 OF 1

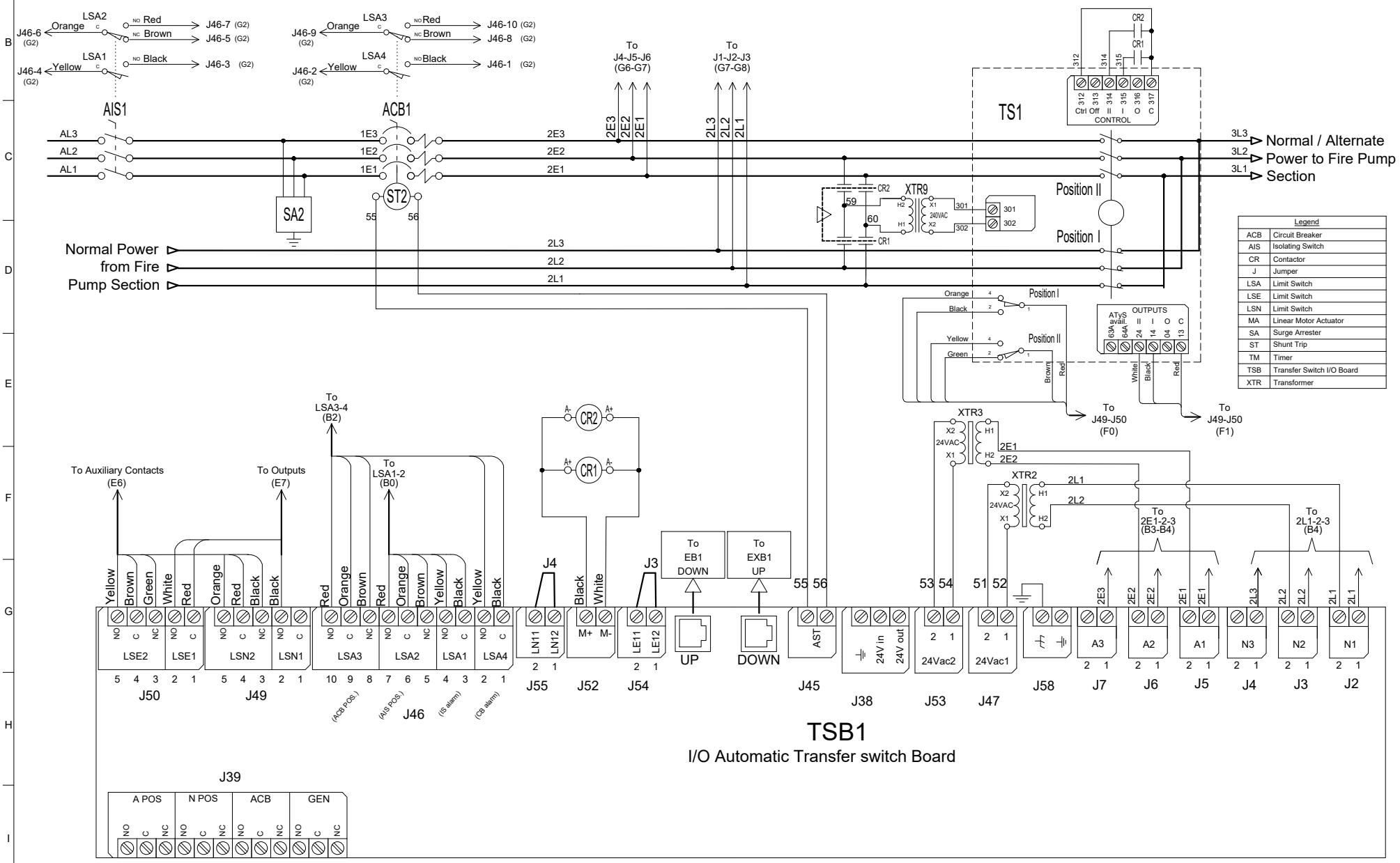

Legend	
ACB	Circuit Breaker
AIS	Isolating Switch
CR	Contactor
J	Jumper
LSA	Limit Switch
LSE	Limit Switch
LSN	Limit Switch
MA	Linear Motor Actuator
SA	Surge Arrester
ST	Shunt Trip
TM	Timer
TSB	Transfer Switch I/O Board
XTR	Transformer

Copyright © 2025 Tornatech Inc. All right reserved. This drawing and the information contained or depicted herein are the sole property of Tornatech Inc. Copies are communicated to the recipient in strict confidence and may not be retransmitted, published, reproduced, copied or used in any manner, including as the basis for the manufacture or sale of any products, without the express prior written consent of Tornatech Inc.

TORNATECH

© Tornatech, Inc. Not for construction. Subject to change without notice.

		BY	DD/MM/YY
DRAWN BY		ZS	10/07/23
FINAL APPROVAL		FC	10/07/23

ELECTRIC FIRE PUMP CONTROLLER

MODEL: VPA / VPS

BUILT TO THE LATEST EDITION OF THE NFPA20 & NFPA70

DRAWING NUMBER VPX-TD800 /E

DWG REV. 0

SHEET 1 OF 1

COPPER CONDUCTORS for Isolating Switch (IS1).
Field Wiring According to Bending Space (AWG or MCM). Terminals L1 - L2 - L3

Bending Space	5 " (127 mm)							8 " (203 mm)			12 " (305 mm)	
HP / Voltage	5	7.5	10	15	20	25	30	40	50	60	75	100
200	1x (10 to 1/0)	1x (8 to 1/0)	1x (8 to 1/0)	1x (6 to 1/0)	1x (4 to 1/0)	1x (3 to 1/0)	1x (2 to 1/0)	1x (1/0 to 3/0)	1x (3/0 to 250)	1x (4/0 to 250)	2x (1/0 to 500)	--------
208	1x (10 to 1/0)	1x (8 to 1/0)	1x (8 to 1/0)	1x (6 to 1/0)	1x (4 to 1/0)	1x (3 to 1/0)	1x (2 to 1/0)	1x (1/0 to 3/0)	1x (3/0 to 250)	1x (4/0 to 250)	2x (1/0 to 500)	2x (2/0 to 500)
220 to 240	1x (10 to 1/0)	1x (10 to 1/0)	1x (8 to 1/0)	1x (6 to 1/0)	1x (4 to 1/0)	1x (4 to 1/0)	1x (3 to 1/0)	1x (1 to 3/0)	1x (2/0 to 3/0)	1x (3/0 to 250)	1x (250)	2x (2/0 to 500)
380 to 416	1x (10 to 1/0)	1x (10 to 1/0)	1x (10 to 1/0)	1x (8 to 1/0)	1x (8 to 1/0)	1x (6 to 1/0)	1x (6 to 1/0)	1x (4 to 1/0)	1x (3 to 1/0)	1x (3 to 1/0)	1x (1/0 to 3/0)	1x (3/0 to 250)
440 to 480	1x (10 to 1/0)	1x (10 to 1/0)	1x (10 to 1/0)	1x (10 to 1/0)	1x (8 to 1/0)	1x (8 to 1/0)	1x (6 to 1/0)	1x (6 to 1/0)	1x (4 to 1/0)	1x (3 to 1/0)	1x (1 to 3/0)	1x (2/0 to 3/0)
600	1x (10 to 1/0)	1x (10 to 1/0)	1x (10 to 1/0)	1x (10 to 1/0)	1x (10 to 1/0)	1x (8 to 1/0)	1x (8 to 1/0)	1x (6 to 1/0)	1x (6 to 1/0)	1x (4 to 1/0)	1x (3 to 1/0)	1x (1 to 3/0)
											5 " (127 mm)	8 " (203 mm)

Bending Space	12 " (305 mm)		16 " (406 mm)					
HP / Voltage	125	150	200	250	300	350	400	450
380 to 416	1x (250)	2x (1/0 to 500)	2x (3/0 to 500)	2x (4/0 to 500)	2x (300 to 500)	2x (400 to 500)	--------	--------
440 to 480	1x (3/0 to 250)	1x (4/0 to 250)	2x (1/0 to 500)	2x (3/0 to 500)	2x (4/0 to 500)	2x (300 to 500)	2x (350 to 500)	2x (400 to 500)
Bending Space	8 " (203 mm)		12 " (305 mm)					

ALUMINUM CONDUCTORS for Isolating Switch (IS1).
Field Wiring According to Bending Space (AWG or MCM). Terminals L1 - L2 - L3

Bending Space	5 " (127 mm)							8 " (203 mm)		10 " (254 mm)	12 " (305 mm)	
HP / Voltage	5	7.5	10	15	20	25	30	40	50	60	75	100
200	1x (10 to 1/0)	1x (6 to 1/0)	1x (6 to 1/0)	1x (4 to 1/0)	1x (3 to 1/0)	1x (1 to 1/0)	1x (1/0)	1x (3/0)	1x (4/0 to 250)	1x (300) ** or 1x (250) 90°C *	2x (2/0 to 500)	--------
208	1x (10 to 1/0)	1x (6 to 1/0)	1x (6 to 1/0)	1x (4 to 1/0)	1x (3 to 1/0)	1x (1 to 1/0)	1x (1/0)	1x (3/0)	1x (4/0 to 250)	1x (300) ** or 1x (250) 90°C *	2x (2/0 to 500)	2x (4/0 to 500)
220 to 240	1x (10 to 1/0)	1x (8 to 1/0)	1x (6 to 1/0)	1x (4 to 1/0)	1x (3 to 1/0)	1x (2 to 1/0)	1x (1 to 1/0)	1x (2/0 to 3/0)	1x (3/0) 90°C *	1x (250)	1x (350) ** N/A	2x (3/0 to 500)
380 to 416	1x (10 to 1/0)	1x (10 to 1/0)	1x (10 to 1/0)	1x (6 to 1/0)	1x (6 to 1/0)	1x (4 to 1/0)	1x (4 to 1/0)	1x (2 to 1/0)	1x (1 to 1/0)	1x (1/0)	1x (3/0)	1x (250 to 350)
440 to 480	1x (10 to 1/0)	1x (10 to 1/0)	1x (10 to 1/0)	1x (8 to 1/0)	1x (6 to 1/0)	1x (6 to 1/0)	1x (6 to 1/0)	1x (4 to 1/0)	1x (2 to 1/0)	1x (1 to 1/0)	1x (1/0 to 3/0)	1x (3/0)
600	1x (10 to 1/0)	1x (10 to 1/0)	1x (10 to 1/0)	1x (10 to 1/0)	1x (8 to 1/0)	1x (6 to 1/0)	1x (6 to 1/0)	1x (4 to 1/0)	1x (4 to 1/0)	1x (2 to 1/0)	1x (1 to 1/0)	1x (2/0 to 3/0)
											5 " (127 mm)	8 " (203 mm)

Bending Space	12 " (305 mm)		16 " (406 mm)					
HP / Voltage	125	150	200	250	300	350	400	450
380 to 416	1x (350) ** N/A	2x (3/0 to 500)	2x (4/0 to 500)	2x (300 to 500)	2x (500)	3x (300 to 500)** 2x (500) 90°C *	--------	--------
440 to 480	1x (250)	1x (300 to 350)** 1x (250) 90°C *	2x (3/0 to 500)	2x (250 to 500)	2x (300 to 500)	2x (400 to 500)	2x (500)	2x (500) 90°C *
Bending Space	8 " (203 mm)		12 " (305 mm)					

*For standard enclosure, use 90°C aluminium wire. Consult Factory for Use of Conductors Rated Lower than 90°C.
**Consult Factory

Power Terminals

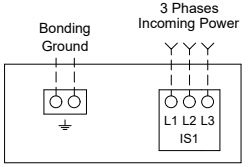

Notes:
1 - For proper wire sizing, refer to NFPA70 and NEC (USA) or CEC (Canada) or local code.
2 - Controller suitable for service entrance in USA.
3 - For more accurate motor connections refer to motor manufacturer or motor nameplate.
4 - Controller is phase sensitive. Incoming lines must be connected in ZS sequence.

Drawing for information only.
Manufacturer reserves the right to modify this drawing without notice.
Contact manufacturer for "As Built" drawing.

Copyright © 2025 Tornatech Inc. All right reserved. This drawing and the information contained or depicted herein are the sole property of Tornatech Inc. Copies are communicated to the recipient in strict confidence and may not be retransmitted, published, reproduced, copied or used in any manner, including as the basis for the manufacture or sale of any products, without the express prior written consent of Tornatech Inc.

TORNATECH

© Tornatech, Inc. Not for construction. Subject to change without notice.

		BY	DD/MM/YY
DRAWN BY		ZS	10/07/23
FINAL APPROVAL		FC	10/07/23

AUTOMATIC TRANSFER SWITCH FOR ELECTRIC FIRE PUMP CONTROLLER

MODEL: VPU

BUILT TO THE LATEST EDITION OF THE NFPA20 & NFPA70

DRAWING NUMBER VPU-TD802/E
DWG REV. 0
SHEET 1 OF 1

COPPER CONDUCTORS for Isolating Switch (AIS1).
Field Wiring According to Bending Space (AWG or MCM). Terminals AL1 - AL2 - AL3

Bending Space	5 " (127 mm)							8 " (203 mm)			12 " (305 mm)	
HP / Voltage	5	7.5	10	15	20	25	30	40	50	60	75	100
200	1x (10 to 1/0)	1x (8 to 1/0)	1x (8 to 1/0)	1x (6 to 1/0)	1x (4 to 1/0)	1x (3 to 1/0)	1x (2 to 1/0)	1x (1/0 to 3/0)	1x (3/0 to 250)	1x (4/0 to 250)	2x (1/0 to 500)	--------
208	1x (10 to 1/0)	1x (8 to 1/0)	1x (8 to 1/0)	1x (6 to 1/0)	1x (4 to 1/0)	1x (3 to 1/0)	1x (2 to 1/0)	1x (1/0 to 3/0)	1x (3/0 to 250)	1x (4/0 to 250)	2x (1/0 to 500)	2x (2/0 to 500)
220 to 240	1x (10 to 1/0)	1x (10 to 1/0)	1x (8 to 1/0)	1x (6 to 1/0)	1x (4 to 1/0)	1x (4 to 1/0)	1x (3 to 1/0)	1x (1 to 3/0)	1x (2/0 to 3/0)	1x (3/0 to 250)	1x (250)	2x (2/0 to 500)
380 to 416	1x (10 to 1/0)	1x (10 to 1/0)	1x (10 to 1/0)	1x (8 to 1/0)	1x (8 to 1/0)	1x (6 to 1/0)	1x (6 to 1/0)	1x (4 to 1/0)	1x (3 to 1/0)	1x (3 to 1/0)	1x (1/0 to 3/0)	1x (3/0 to 250)
440 to 480	1x (10 to 1/0)	1x (10 to 1/0)	1x (10 to 1/0)	1x (10 to 1/0)	1x (8 to 1/0)	1x (8 to 1/0)	1x (6 to 1/0)	1x (6 to 1/0)	1x (4 to 1/0)	1x (3 to 1/0)	1x (1 to 3/0)	1x (2/0 to 3/0)
600	1x (10 to 1/0)	1x (10 to 1/0)	1x (10 to 1/0)	1x (10 to 1/0)	1x (10 to 1/0)	1x (8 to 1/0)	1x (8 to 1/0)	1x (6 to 1/0)	1x (6 to 1/0)	1x (4 to 1/0)	1x (3 to 1/0)	1x (1 to 3/0)
											5 " (127 mm)	**8 " (203 mm)**

Bending Space	12 " (305 mm)		16 " (406 mm)					
HP / Voltage	125	150	200	250	300	350	400	450
380 to 416	1x (250)	2x (1/0 to 500)	2x (3/0 to 500)	2x (4/0 to 500)	2x (300 to 500)	2x (400 to 500)	--------	--------
440 to 480	1x (3/0 to 250)	1x (4/0 to 250)	2x (1/0 to 500)	2x (3/0 to 500)	2x (4/0 to 500)	2x (300 to 500)	2x (350 to 500)	2x (400 to 500)
Bending Space	**8 " (203 mm)**		**12 " (305 mm)**					

ALUMINUM CONDUCTORS for Isolating Switch (AIS1).
Field Wiring According to Bending Space (AWG or MCM). Terminals AL1 - AL2 - AL3

Bending Space	5 " (127 mm)							8 " (203 mm)		10 " (254 mm)	12 " (305 mm)	
HP / Voltage	5	7.5	10	15	20	25	30	40	50	60	75	100
200	1x (10 to 1/0)	1x (6 to 1/0)	1x (6 to 1/0)	1x (4 to 1/0)	1x (3 to 1/0)	1x (1 to 1/0)	1x (1/0)	1x (3/0)	1x (4/0 to 250)	1x (300) ** or 1x (250) 90°C *	2x (2/0 to 500)	--------
208	1x (10 to 1/0)	1x (6 to 1/0)	1x (6 to 1/0)	1x (4 to 1/0)	1x (3 to 1/0)	1x (1 to 1/0)	1x (1/0)	1x (3/0)	1x (4/0 to 250)	1x (300) ** or 1x (250) 90°C *	2x (2/0 to 500)	2x (4/0 to 500)
220 to 240	1x (10 to 1/0)	1x (8 to 1/0)	1x (6 to 1/0)	1x (4 to 1/0)	1x (3 to 1/0)	1x (2 to 1/0)	1x (1 to 1/0)	1x (2/0 to 3/0)	1x (3/0) 90°C *	1x (250)	1x (350) ** N/A	2x (3/0 to 500)
380 to 416	1x (10 to 1/0)	1x (10 to 1/0)	1x (10 to 1/0)	1x (6 to 1/0)	1x (6 to 1/0)	1x (4 to 1/0)	1x (4 to 1/0)	1x (2 to 1/0)	1x (1 to 1/0)	1x (1/0)	1x (3/0)	1x (250 to 350)
440 to 480	1x (10 to 1/0)	1x (10 to 1/0)	1x (10 to 1/0)	1x (8 to 1/0)	1x (6 to 1/0)	1x (6 to 1/0)	1x (6 to 1/0)	1x (4 to 1/0)	1x (2 to 1/0)	1x (1 to 1/0)	1x (1/0 to 3/0)	1x (3/0)
600	1x (10 to 1/0)	1x (10 to 1/0)	1x (10 to 1/0)	1x (10 to 1/0)	1x (8 to 1/0)	1x (6 to 1/0)	1x (6 to 1/0)	1x (4 to 1/0)	1x (4 to 1/0)	1x (2 to 1/0)	1x (1 to 1/0)	1x (2/0 to 3/0)
											5 " (127 mm)	**8 " (203 mm)**

Bending Space	12 " (305 mm)		16 " (406 mm)					
HP / Voltage	125	150	200	250	300	350	400	450
380 to 416	1x (350) ** N/A	2x (3/0 to 500)	2x (4/0 to 500)	2x (300 to 500)	2x (500)	3x (300 to 500)** 2x (500) 90°C *	--------	--------
440 to 480	1x (250)	1x (300 to 350)** 1x (250) 90°C *	2x (3/0 to 500)	2x (250 to 500)	2x (300 to 500)	2x (400 to 500)	2x (500)	2x (500) 90°C *
Bending Space	**8 " (203 mm)**		**12 " (305 mm)**					

*For standard enclosure, use 90°C aluminium wire. Consult Factory for Use of Conductors Rated Lower than 90°C.
**Consult Factory

Power Terminals

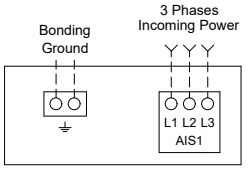

Notes:
1 - Controller is phase sensitive. Incoming lines must be connected in ZS sequence.

Drawing for information only.
Manufacturer reserves the right to modify this drawing without notice.
Contact manufacturer for "As Built" drawing.

Copyright © 2025 Tornatech Inc. All right reserved. This drawing and the information contained or depicted herein are the sole property of Tornatech Inc. Copies are communicated to the recipient in strict confidence and may not be retransmitted, published, reproduced, copied or used in any manner, including as the basis for the manufacture or sale of any products, without the express prior written consent of Tornatech Inc.

TORNATECH

© Tornatech, Inc. Not for construction.
Subject to change without notice.

		BY	DD/MM/YY
DRAWN BY		ZS	10/07/23
FINAL APPROVAL		FC	10/07/23

ELECTRIC FIRE PUMP CONTROLLER

MODEL: VPA / VPS

BUILT TO THE LATEST EDITION OF THE NFPA20 & NFPA70

DRAWING NUMBER VPX-TD801 /E
DWG REV. 0
SHEET 1 OF 1

COPPER CONDUCTORS for Motor Connection (1M).
Field Wiring According to Bending Space (AWG or MCM). Terminals T1 - T2 - T3

HP / Voltage	5	7.5	10	15	20	25	30	40	50	60	75	100
200	1x (10 to 2)	1x (8 to 2)	1x (8 to 2)	1x (6 to 2)	1x (4 to 2)	1x (3 to 2/0)	1x (2 to 2/0)	1x (1/0 to 3/0)	1x (3/0)	1x (4/0 to 300)	1x (300)	--------
208	1x (10 to 2)	1x (8 to 2)	1x (8 to 2)	1x (6 to 2)	1x (4 to 2)	1x (3 to 2/0)	1x (2 to 2/0)	1x (1/0 to 3/0)	1x (3/0)	1x (4/0 to 300)	1x (300)	2x (2/0 to 300)
220 to 240	1x (10 to 2)	1x (10 to 2)	1x (8 to 2)	1x (6 to 2)	1x (4 to 2)	1x (4 to 2/0)	1x (3 to 2/0)	1x (1/0 to 3/0)	1x (2/0 to 3/0)	1x (3/0)	1x (250 to 300)	2x (2/0 to 300)
380 to 416	1x (10 to 2)	1x (10 to 2)	1x (10 to 2)	1x (8 to 2)	1x (8 to 2)	1x (6 to 2)	1x (6 to 1/0)	1x (4 to 1/0)	1x (3 to 2/0)	1x (1 to 2/0)	1x (1/0 to 3/0)	1x (3/0)
440 to 480	1x (10 to 2)	1x (10 to 2)	1x (10 to 2)	1x (10 to 2)	1x (8 to 2)	1x (8 to 2)	1x (6 to 2)	1x (6 to 2)	1x (4 to 2/0)	1x (3 to 2/0)	1x (1 to 1/0)	1x (2/0 to 3/0)
600	1x (10 to 2)	1x (10 to 2)	1x (10 to 2)	1x (10 to 2)	1x (10 to 2)	1x (8 to 2)	1x (8 to 2)	1x (6 to 2)	1x (6 to 2)	1x (4 to 2/0)	1x (3 to 1/0)	1x (1 to 1/0)

HP / Voltage	125	150	200	250	300	350	400	450
380 to 416	1x (250 to 300)	1x (300)	2x (3/0 to 300)	2x (4/0 to 300)	2x (300)	2x (400 to 500)	--------	--------
440 to 480	1x (3/0)	1x (4/0 to 300)	2x (1/0 to 300)	2x (3/0 to 300)	2x (4/0 to 300)	2x (300)	2x (350 to 500)	2x (400 to 600)

Motor Terminals

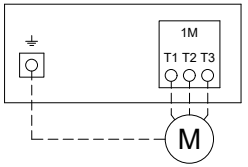

Models: VPA / VPS

ALUMINUM CONDUCTORS for Contactor (1M).
Field Wiring According to Bending Space (AWG or MCM). Terminals T1 - T2 - T3

HP / Voltage	5	7.5	10	15	20	25	30	40	50	60	75	100
200	1x (10 to 2/0) **	1x (10 to 2/0) **	1x (6 to 2/0) **	1x (4 to 2/0) **	1x (2 to 2/0) **	1x (1 to 2/0) **	1x (1/0 to 2/0) **	1x (2/0) 90°C *	Consult Factory	1x (300)	1x (300) 90°C *	--------
208	1x (10 to 2/0) **	1x (10 to 2/0) **	1x (6 to 2/0) **	1x (4 to 2/0) **	1x (2 to 2/0) **	1x (1 to 2/0) **	1x (1/0 to 2/0) **	1x (2/0) 90°C *	Consult Factory	1x (300)	1x (300) 90°C *	2x (4/0 to 300)
220 to 240	1x (10 to 2/0) **	1x (10 to 2/0) **	1x (8 to 2/0) **	1x (4 to 2/0) **	1x (3 to 2/0) **	1x (2 to 2/0) **	1x (1 to 2/0) **	1x (2/0)	1x (3/0) 90°C *	Consult Factory	1x (300) 90°C *	2x (3/0 to 300)
380 to 416	1x (12 to 2/0) **	1x (12 to 2/0) **	1x (10 to 2/0) **	1x (8 to 2/0) **	1x (6 to 2/0) **	1x (6 to 2/0) **	1x (4 to 2/0) **	1x (2 to 2/0) **	1x (1 to1/0)	1x (1/0)	1x (3/0)	Consult Factory
440 to 480	1x (12 to 2/0) **	1x (12 to 2/0) **	1x (10 to 2/0) **	1x (10 to 2/0) **	1x (8 to 2/0) **	1x (6 to 2/0) **	1x (6 to 2/0) **	1x (4 to 2/0) **	1x (2 to 1/0)	1x (1 to 1/0)	1x (1/0)	1x (3/0)
600	1x (12 to 2/0) **	1x (12 to 2/0) **	1x (12 to 2/0) **	1x (10 to 2/0) **	1x (10 to 2/0) **	1x (8 to 2/0) **	1x (8 to 2/0) **	1x (4 to 2/0) **	1x (4 to 2/0) **	1x (2 to 1/0)	1x (1 to 1/0)	Consult Factory

HP / Voltage	125	150	200	250	300	350	400	450
380 to 416	1x (300) 90°C *	Consult Factory	2x (4/0 to 300)	2x (300)	Consult Factory	2x (600)	--------	--------
440 to 480	Consult Factory	1x (300)	2x (3/0 to 300)	2x (250 to 300)	2x (300)	2x (300) 90°C *	2x (500)	2x (600)

*For standard enclosure, use 90°C aluminium wire. Consult Factory for Use of Conductors Rated Lower than 90°C.
**Option V659 required.

Notes:
1 - For proper wire sizing, refer to NFPA70 and NEC (USA) or CEC (Canada) or local code.
2 - Controller suitable for service entrance in USA.
3 - For more accurate motor connections refer to motor manufacturer or motor nameplate.
4 - Controller is phase sensitive. Incoming lines must be connected in ZS sequence.

Drawing for information only.
Manufacturer reserves the right to modify this drawing without notice.
Contact manufacturer for "As Built" drawing.

Copyright © 2025 Tornatech Inc. All right reserved. This drawing and the information contained or depicted herein are the sole property of Tornatech Inc. Copies are communicated to the recipient in strict confidence and may not be retransmitted, published, reproduced, copied or used in any manner, including as the basis for the manufacture or sale of any products, without the express prior written consent of Tornatech Inc.

TORNATECH

© Tornatech, Inc. Not for construction.
Subject to change without notice.

	BY	DD/MM/YY
DRAWN BY	ZS	10/07/23
FINAL APPROVAL	FC	10/07/23

ELECTRIC FIRE PUMP CONTROLLER

MODEL: VPS

BUILT TO THE LATEST EDITION OF THE NFPA20 & NFPA70

DRAWING NUMBER VPS-TD800 /E
DWG REV. 0
SHEET 1 OF 1

Field Connections

Terminals Wire Size:
24 - 12 AWG
0.5 Nm

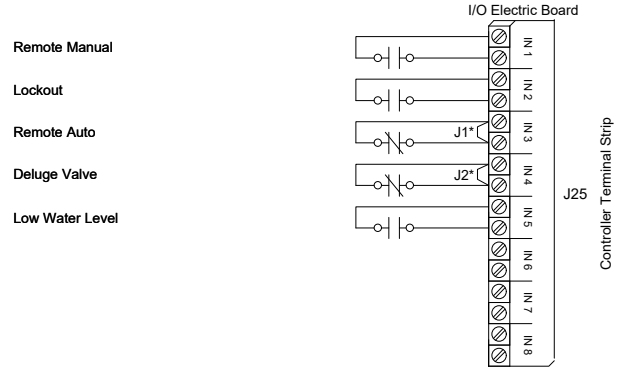

Network Connections

Terminals Wire Size:
Shielded Female Connector RJ45

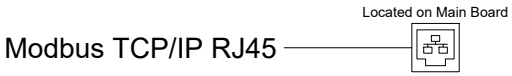

* Remove jumper to use this feature

Alarm Contacts

Terminals Wire Size:
24 - 12 AWG
0.5 Nm

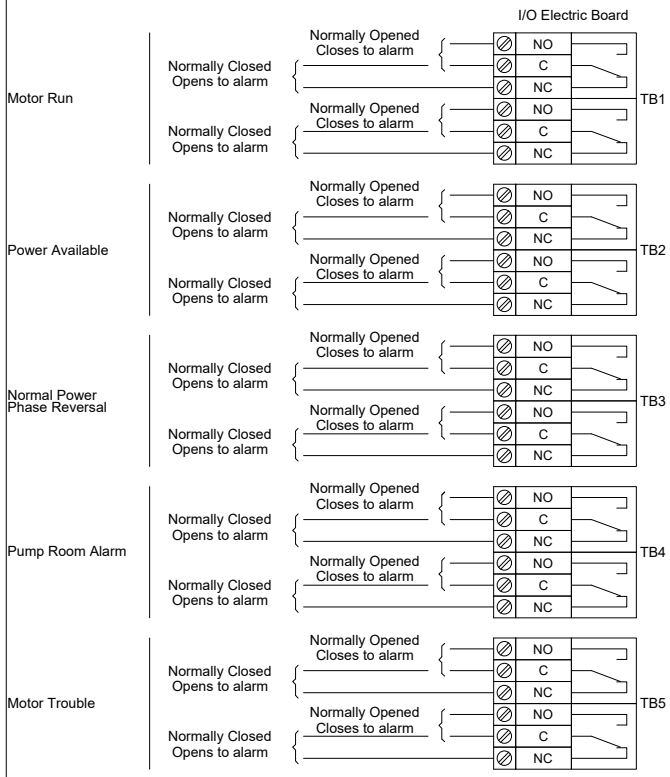

24 - 12 AWG
0.5 Nm

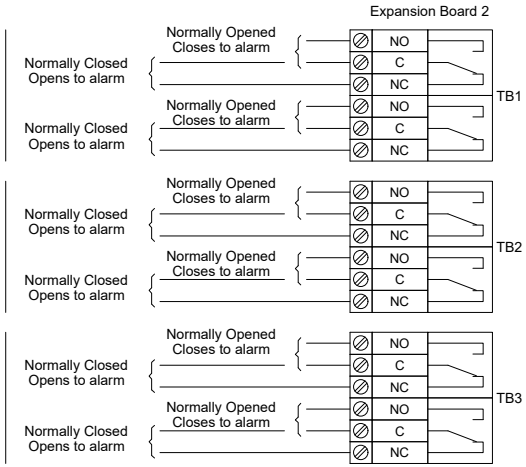

Copyright © 2025 Tornatech Inc. All right reserved. This drawing and the information contained or depicted herein are the sole property of Tornatech Inc. Copies are communicated to the recipient in strict confidence and may not be retransmitted, published, reproduced, copied or used in any manner, including as the basis for the manufacture or sale of any products, without the express prior written consent of Tornatech Inc.

© Tornatech, Inc. Not for construction.
Subject to change without notice.

	BY	DD/MM/YY
DRAWN BY	ZS	21/07/23
FINAL APPROVAL	FC	21/07/23

AUTOMATIC TRANSFER SWITCH FOR ELECTRIC FIRE PUMP CONTROLLER

MODEL: VPU

BUILT TO THE LATEST EDITION OF THE NFPA20 & NFPA70

DRAWING NUMBER: VPU-TD801/E
DWG REV. 0
SHEET 1 OF 1

Remote Alarm Terminals (TSB1)

Terminals Wire Size:
24 - 12 AWG
0.5 Nm

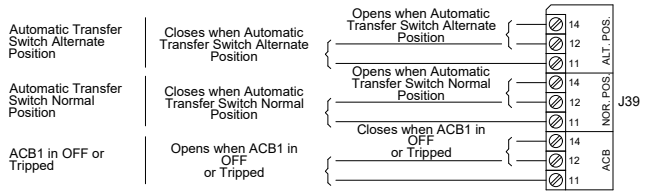

Control Terminals (TSB1)

Terminals Wire Size:
24 - 12 AWG
0.5 Nm

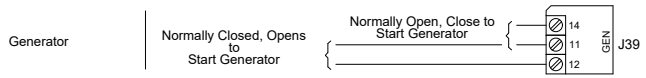

Copyright © 2025